Suruhanjaya Tenaga

The Malaysian Grid Code

DOCUMENT CONTROL

Version #	Date of Revision	Revised by	Organization
1/2010	2 August 2010	Ahmad Johari Jaffar	ST

CONTENTS

Preface

P1.0 Introduction

P1.0.1 This preface is provided to Users and to prospective Users of the Grid System for information only and does not constitute part of the Grid Code.

P1.0.2 The purpose of the preface is to provide brief background information on the Grid System of Peninsular Malaysia, its operation, Standards used in planning and operating the Grid System, the need for the Grid Code as well as the contents of the Grid Code.

P1.0.3 A schedule of diagrams is also provided to Users and prospective Users as part of this Preface to facilitate better understanding of certain aspects of this Grid Code by the Users. The schedule of diagrams include:

(1) Figure P1 - The entities in the Grid Code;
(2) Figure P2 - The Malaysian Electricity Industry Structure as used in the Grid Code;
(3) Figure P3 - Inputs and outputs of the Planning Process of the Grid Owner;
(4) Figure P4 - Planning Code – Data required to be annually submitted to the Grid Owner;
(5) Figure P5 - Planning Code – Data requirements by the Grid Owner and GSO for a new connection to the Transmission System or modifications to an existing connection;
(6) Figure P6 – Power System structure, connected parties and applicable codes; and
(7) Figure P7 - The Generation Dispatch process.

Just as the Preface itself the schedule of diagrams are for information only and do not constitute part of the Grid Code. The diagrams are conceptual and do not imply any specific relationship between entities and/or any ownership by or of any of the entities.

P1.1 Transmission Functions

P1.1.1 To facilitate economic and secure operation of the Grid, the electric power system of Peninsular Malaysia has been and will continue to be structured comprising of generation sources and demands interconnected together by a Transmission System and as a whole known as the Grid. However, the advantages of an interconnected system cannot be realized unless the

system is subject to surveillance, operation and control by a single entity irrespective of ownership of individual plants connected to the Grid.

P1.1.2 The manner in which the Grid System in Peninsular Malaysia is planned, designed and operated is based upon typical international practices. Subject to some constraints the Grid System allows electricity to be supplied to Users from wherever it can be produced and to fulfil this objective requires a certain specific Standards for Plant and Apparatus as well as centralised coordination of all those Users who benefit from the existence of the Grid System.

P1.1.3 Since power system reliability is of economic importance to the country, the Grid System is organized with the objectives of:

(1) Developing and maintaining an efficient, coordinated and economical Transmission System for bulk delivery of electrical energy; and

(2) Ensuring continuous availability of sufficient electrical energy supply for all Consumers, with an adequate margin between supply and Demand.

P1.1.4 In Peninsular Malaysia TNB is the Grid Owner who is the entity entrusted to carry out the transmission functions. Under the current organization, TNB Transmission Division can be viewed to consist of three (3) distinct functions, namely: the Grid System Operator (GSO), the Transmission Asset Development, and Operation and Maintenance (hereinafter called TNB Transmission).

P1.1.5 This Grid Code is established in-line with the current electricity industry structure and organization and that the GSO is part of TNB Transmission Division and to ensure transparency and independence of the GSO, its functions, duties and responsibilities are clearly defined in this Grid Code. If in the future, the structure and organization of the electricity industry are changed then it may be necessary to review the provisions of this Grid Code accordingly.

P1.1.6 The Grid Owner is entrusted to plan and develop the Grid System in order to maintain adequate grid capacity.

P1.1.7 The GSO is entrusted with the operation of the Grid System. Other parties associated with the Grid System are generally termed and known as Users comprising Grid Owner (who owns, operates and maintains the TNB Transmission System), Generators, Distributors, Directly Connected Customers, Network Operators, and Interconnected Parties.

P1.1.8 In ensuring reliability, security and power quality of supply in planning the development and operation of the Grid System, the following processes and related standards are applied by the GSO and Grid Owner:

(1) the Generation Reliability Standard which relates to provision of sufficient firm Generation Capacity to meet the Demand with a sufficient margin for plant maintenance, plant breakdown and plant unavailability, i.e., scheduled and unscheduled Generating Plant outages, to meet the annual and daily electric energy demand;

(2) the Transmission Reliability Standard which relates to provision of sufficient Transmission Capacity, operational facilities, operation and maintenance activities and co-ordination with generation and distribution functions to enable continued supply of electric energy to the Distributors, Network Operators and Directly Connected Customers.

The above Standards ensure a degree of built-in redundancy for the Grid System. However, occasionally there may be circumstances in which the built-in redundancy is eroded to a degree where the continuity of supply could be prejudiced. Therefore the levels of built-in redundancy is required to be kept under continuous review in order to identify investments that may be needed in order to ensure satisfactory reliability of supply in good time.

P1.2 Development of the Grid System and the Grid Code

P1.2.1 Although the year 1953 can be considered the birth year of the Grid System in Peninsular Malaysia, it was not until early 1970's when the first 275kV transmission circuits were commissioned and started the rapid expansion of the Grid System. In the late 1980's, to cater for fast demand growth and the need for a more secure Grid System, 500kV was chosen as the next transmission voltage level and in 1996 the first 500kV circuits were commissioned.

P1.2.2 The present day Grid System comprises both double-circuit 500kV and 275kV transmission lines connecting Power Stations and Demand centers. The 275kV Transmission Network spans the whole Peninsular Malaysia; north to south and east to west crossing the Main Range as well as following the coastlines. Over the years, the 275kV Transmission Network has developed from a simple radial point-to-point configuration to a meshed network comprising major and minor loops and radial circuits emanating from a main trunk line stretching from the Thai border in the North to Singapore in the South. The 500kV Transmission Network is

being developed in stages, as the need arises, as another main trunk line from north to south along the west coast of Peninsular Malaysia.

P1.2.3 The Grid System is also interconnected with power systems of Thailand in the North and Singapore in the South and both were first established in the 1980's. The interconnection with Thailand has been upgraded since 1998 from a 100MW AC Interconnection to 300MW HVDC Interconnection that allows rapid control of power and energy transactions between two power systems. Although the energy transaction through the 250MW AC Interconnection with Singapore has always been set to zero, the interconnection has proven to be of benefit to both power systems in times of emergencies.

P1.2.4 Year 1992/93 could be considered the beginning of electricity industry liberalization in Peninsular Malaysia with the emergence of the first Independent Power Producer (IPP). In view of the industry liberalization and in anticipation of growing number of Grid System Users of different owners and objectives, in 1994 the first Malaysian Grid Code was introduced and TNB Transmission Division was assigned as the GSO who was then entrusted the duties to coordinate and facilitate the development and operation of the Grid System as required by the provisions of the Grid Code.

P1.2.5 This Grid Code is a major revision of the 1994 Grid Code.

P1.3 Electricity Industry Structure

P1.3.1 TNB is a licensee who owns and operates generating plants, transmission systems and distribution systems. Each of the core businesses of TNB is distinctively separated into three divisions of generation, transmission, and distribution In the generation wholesale market, apart from TNB there are also generating plants owned and operated by Independent Power Producers (IPP) and connected to the Grid System. In the distribution sector there are also other distribution licensees besides TNB that buy bulk power from TNB and distribute to customers in a franchise areas. Some of these licensees also operate Distributed Generation.

P1.3.2 The Grid System is maintained and operated by TNB Transmission Division, which also includes the GSO who operates the Grid System and coordinates all parties connected to the Grid System. TNB is the Grid Owner who owns and plans the Grid System. TNB is also the Single

Buyer for all generation outputs supplied to the Grid System by the Power Stations and other externally interconnected parties.

P1.3.3 The GSO has a responsibility for operational planning, real-time re-scheduling, dispatch and control of the Grid System in compliance with the provisions of the **Grid Code**.

P1.4 Coordination of the Grid Operation and the Rules

P1.4.1 For reliable operation of the Grid System, the coordination of all connected parties is required encompassing all the activities from planning the development to ensure adequate generation and transmission capacity, to operational planning to ensure secure operation of the system taking into account maintenance and forced outages as well as in real time operation dealing with forced outages, essential system operational switching and other system events that can occur.

P1.4.2 The central coordination is also necessary in ensuring harmonious operation of all system components in matching generation and demand, in delivering the appropriate response to system events as well as not to disconnect these components from the system in an inadvertent manner.

P1.4.3 Therefore whilst most but not all of the electricity will be transmitted across the Grid System, the interconnected System as a whole must continue to be centrally coordinated and this will continue to be accomplished by the GSO.

P1.4.4 In order to achieve the required level of central coordination the Grid Owner and GSO rely on the following sets of technical rules and commercial agreements enabling secure and economic operation of the system:

(1) The Transmission System Reliability Standards and Transmission System Power Quality Standards defining the technical standards to be used in designing, planning and operating the system as well as the quality of the power delivered by the Grid System to Users;

(2) The Grid Code defining a set of day to day planning, design and operational principles and procedures governing the relationship of the Grid Owner and GSO with all the Users. It also defines the responsibilities of all parties towards maintaining harmonious operation of the system under both normal and exceptional circumstances involving disturbances spanning from those initiated by climatic conditions to equipment failures and mal-operations;

(3) A set of International and Malaysian Electrical Equipment Standards defining the design parameters and operational limits of individual components forming the Grid System and all the generation and distribution and demand related equipment connected to the Grid System;

(4) The technical conditions and performance parameters specified in the Power Purchase Agreements (PPAs) or other similar agreements with all Generators and other Users in designing, planning and operating the system and determining the requirements for frequency and voltage control for secure system operation; and

(5) The commercial conditions and parameters set in the PPAs in determining the scheduling and dispatch of all Generating Units in the Grid System in a Total Least Cost manner. In cases where fuel prices are subsidized, the price to be used for scheduling shall be the price decided by the government.

(6) In scheduling and dispatch, the GSO shall also take into account the constraints in fuel availability, if any, and for this purpose GSO shall coordinate with the fuel suppliers, where necessary.

P1.5 The Grid Code

P1.5.1 The Grid Code is designed to permit the development, maintenance and operation of the Grid System in an efficient, coordinated and economical manner, providing a defined level of power quality avoiding any undue discrimination between Users and categories of Users connected to the Grid System. In coordinating design, system development, operational planning including production planning, and real time operation of the system, the GSO, Grid Owner and all Users connected to the system are required to comply with the Grid Code to ensure secure and safe operation of the system.

P1.5.2 In order for the Grid Owner and GSO to achieve the appropriate central coordination, the availability of an adequate level of generation capacity is essential. The Grid Owner applies the Generation Security Standard to forecast additional generation investment requirements on an annual basis.

P1.5.3 The GSO will endeavour to maintain overall reliability of the Grid System within the approved Transmission System Reliability Standards and the delivered power quality from the Grid System within the Transmission System Power Quality Standards. This means that the GSO will endeavour to balance generation and demand at all times from the portfolio of

generating plant that is made available by the Generators as the GSO does not own or operate any generating plant.

P1.5.4 The Grid Owner in consultation with GSO, reports its annual assessment of Generation Adequacy to the Energy Commission (EC) under the terms and conditions of TNB's Licence. Under the Energy Commission Act 2001 (Act 610) and the Electricity Supply Act, 1990 (Act 447), the EC is responsible to regulate all matters relating to the electricity supply industry and to secure that all reasonable demands for electricity are satisfied respectively.

P1.6 Contents of the Grid Code

P1.6.1 The Grid Code is divided into the following Parts:

(1) Part I: Glossary and Definitions;
(2) Part II: Introduction and Purpose;
(3) Part III: General Conditions;
(4) Part IV: Planning Code;
(5) Part V: Connection Code;
(6) Part VI: Operation Code;
(7) Part VII Scheduling and Dispatch Code;
(8) Part VIII: Data Registration Code; and
(9) Part IX: Metering Code.

P1.6.2 The constituent Parts of the Grid Code each address a specific subject area associated with an activity related to ensuring safe, secure and economic operation of the Grid System. Each Part also defines the duties and responsibilities of the GSO, Grid Owner and the Users towards compliance with the Grid Code and thus ensuring the safe, secure and economic operation of the Grid System.

P1.7 Conclusions

P1.7.1 Based on the foregoing, it is concluded that the Grid Code is an essential document to provide procedures, requirements, responsibilities and obligations of the GSO, Grid Owner and all Users of the Grid System to ensure its efficient development and secure operation without unduly discriminating any User or category of Users. It is for this reason that compliance to the Grid Code is obligatory and not optional under the license term applicable to each User.

P1.7.2 The GSO in discharging his duties through the provisions of the Grid Code ensures independence, non-discrimination and transparency of all his activities.

<End of Preface>

Preface - Schedule of Diagrams

Figure P1 – This figure illustrates how the various parties identified in the Grid Code are connected or associated with Grid System.

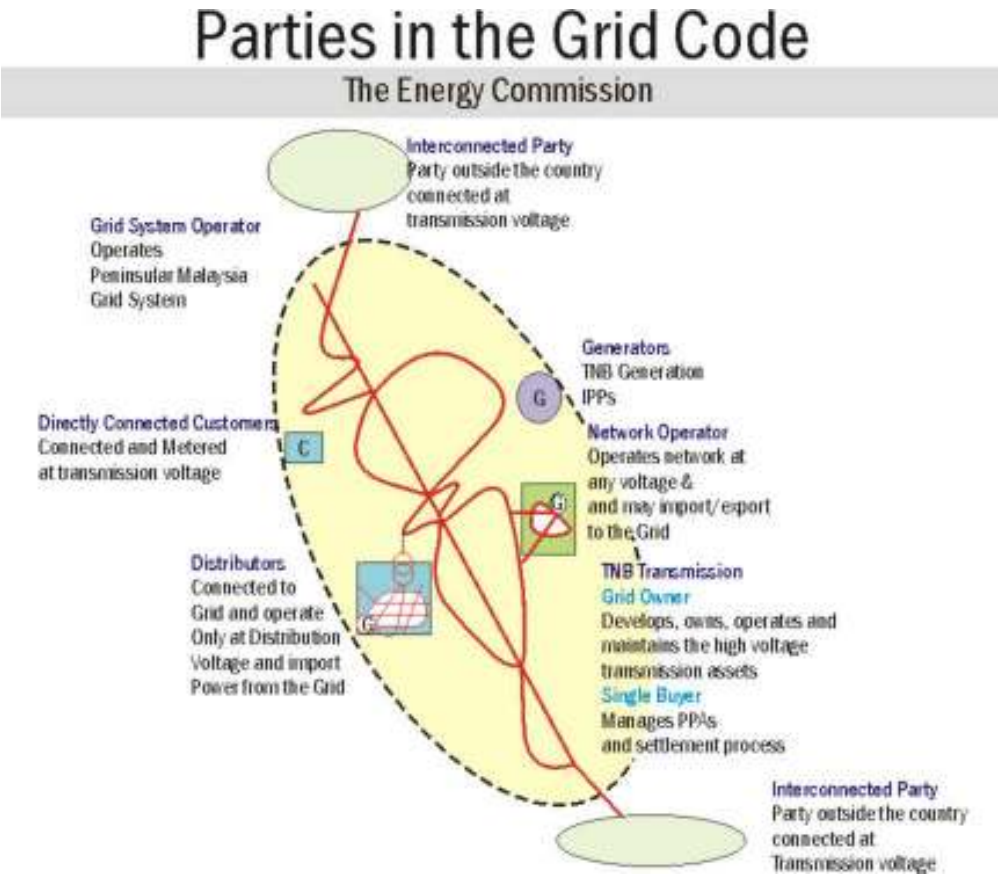

Figure P2 – This figure illustrates the Peninsular Malaysia electricity industry structure in terms of functions as used in the Grid Code.

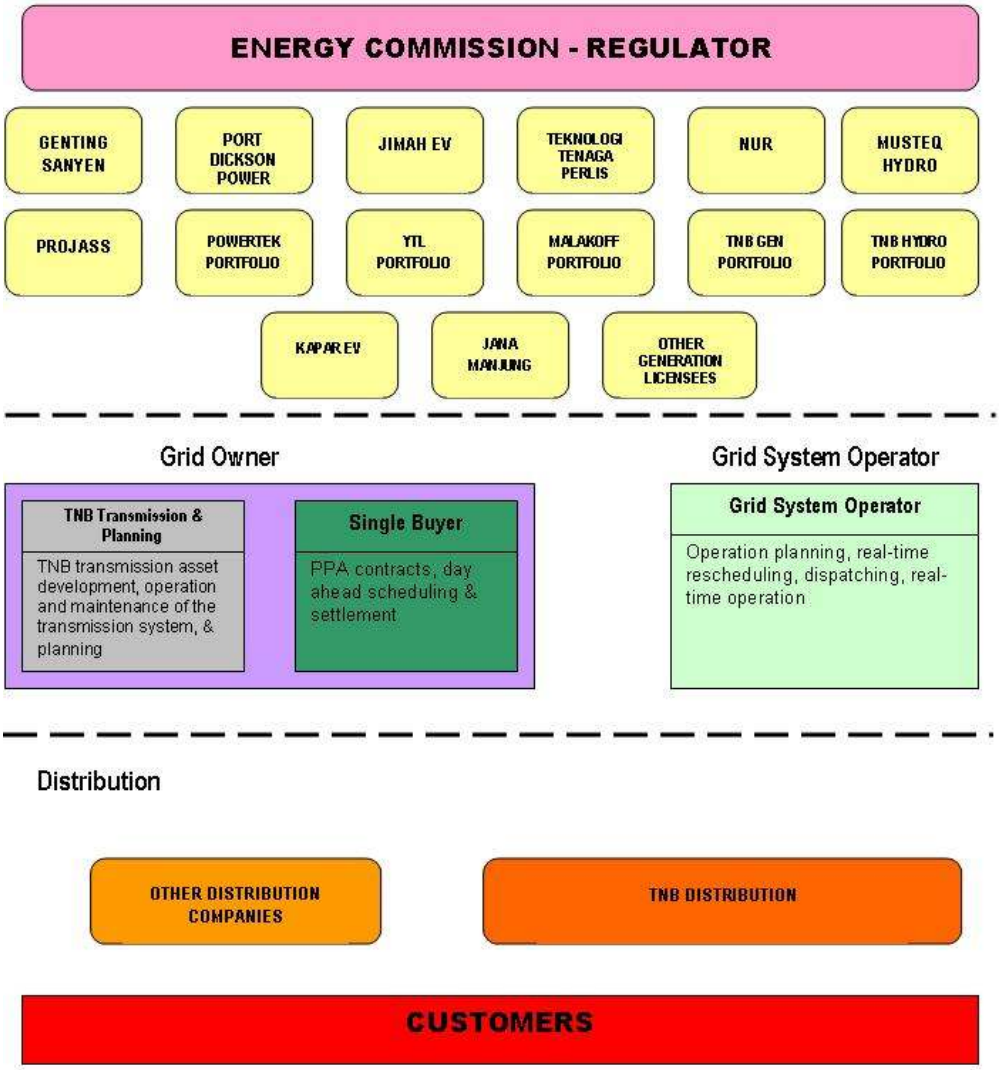

Figure P3 – This figure indicates the inputs and outputs of the Planning Process of the Grid Owner as specified in the Part IV: Planning Code.

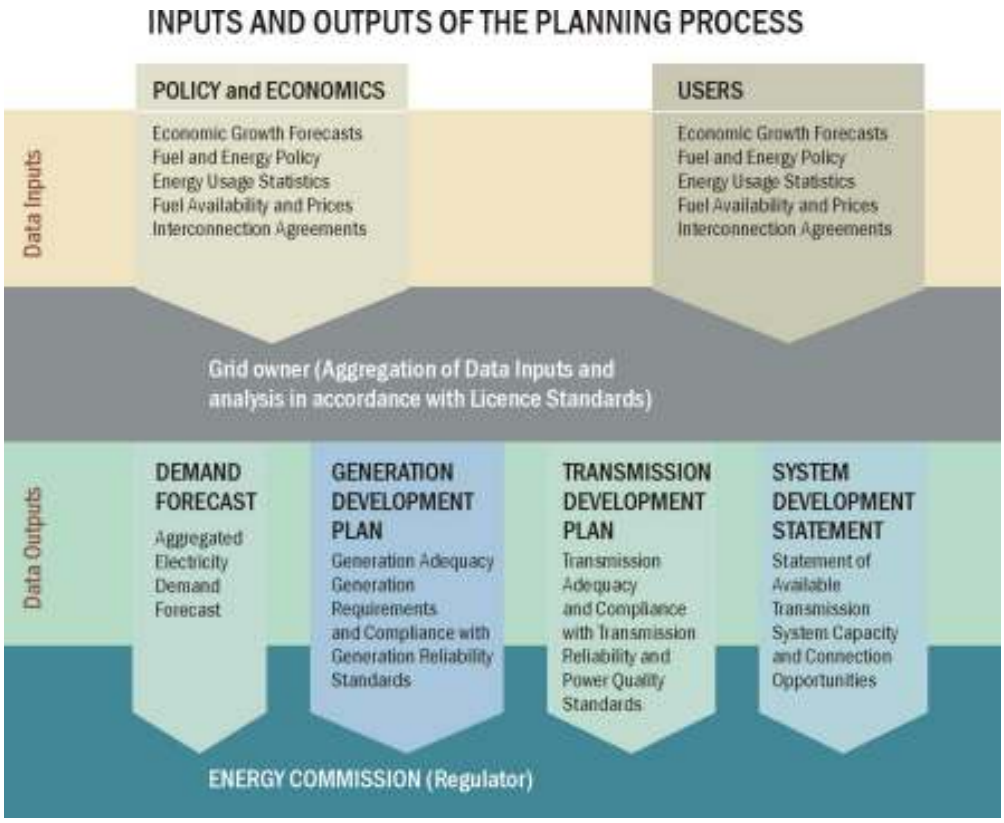

Figure P4 – This figure indicates the list of data required to be submitted to the Grid Owner under the Part IV: Planning Code.

Figure P5 – This figure indicates the data requirements by the Grid Owner for a new connection to the Transmission System or modifications to an existing connection as specified in the Part IV: Planning Code

PLANNING CODE	Data Required by the Grid Owner for a New Connection to Transmission System or Modifications to a Connection
PRELIMINARY PROJECT DATA	• received with the connection or modification application • basic data to enable planner to plan and study the connection options before an offer can be made • entered into Grid owner database as preliminary project data
COMMITTED PROJECT DATA	• received after the connection agreement is signed (or a new agreement for the modification) • detailed data to enable planner to plan and carry out detailed system studies for future planning years including the committed plant operating on the system (LF, stability, fault level etc.) • entered into the Grid owner and Grid System Operator database as committed project data
CONTRACTED PROJECT DATA	• received after the plant commissioning and completion of all the grid code compliance test • detailed and accurate data enabling Grid owner planner to plan future system development and carry out detailed system studies for future planning years (LF, stability, fault level, etc.) • detailed and accurate data for current year operational studies • entered into Grid owner and Grid System Operator database as registered data for the current years entered into Grid owner and Grid System Operator database as estimated registered data for future years

Figure P6 – Structure of the Power System, connected Parties and applicable Codes

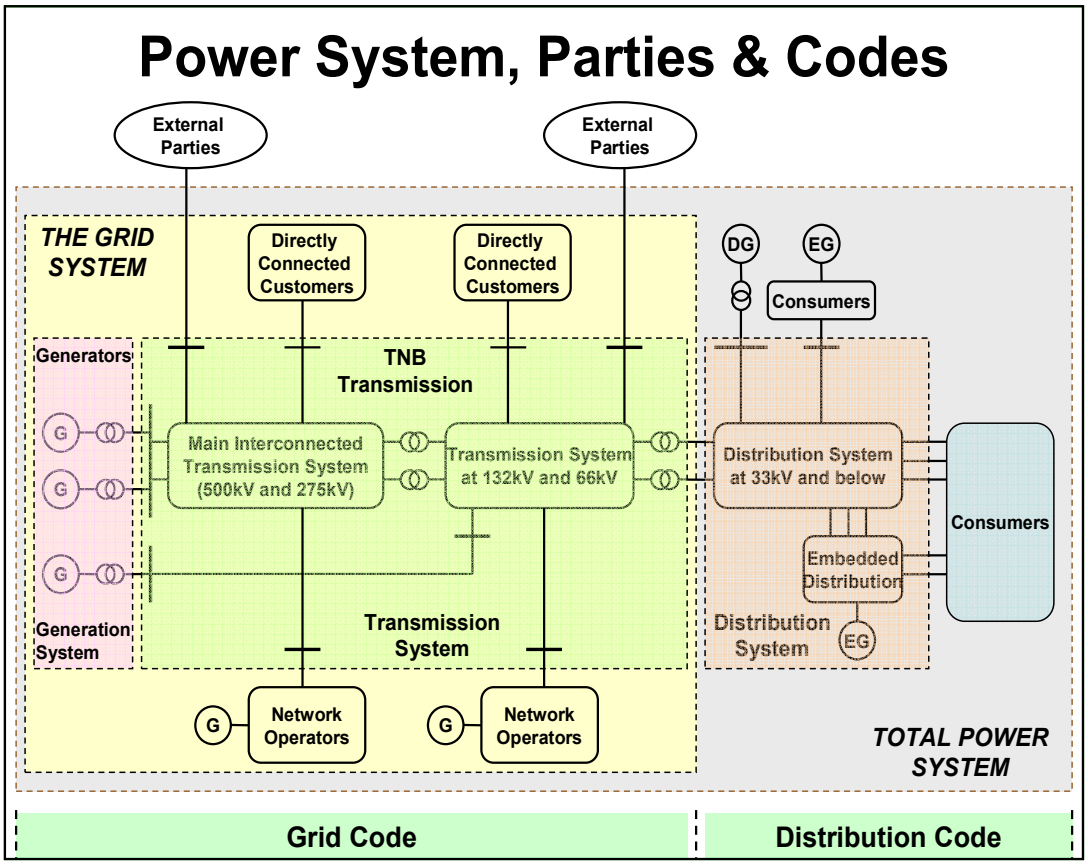

Figure P7 - The Generation Dispatch process.

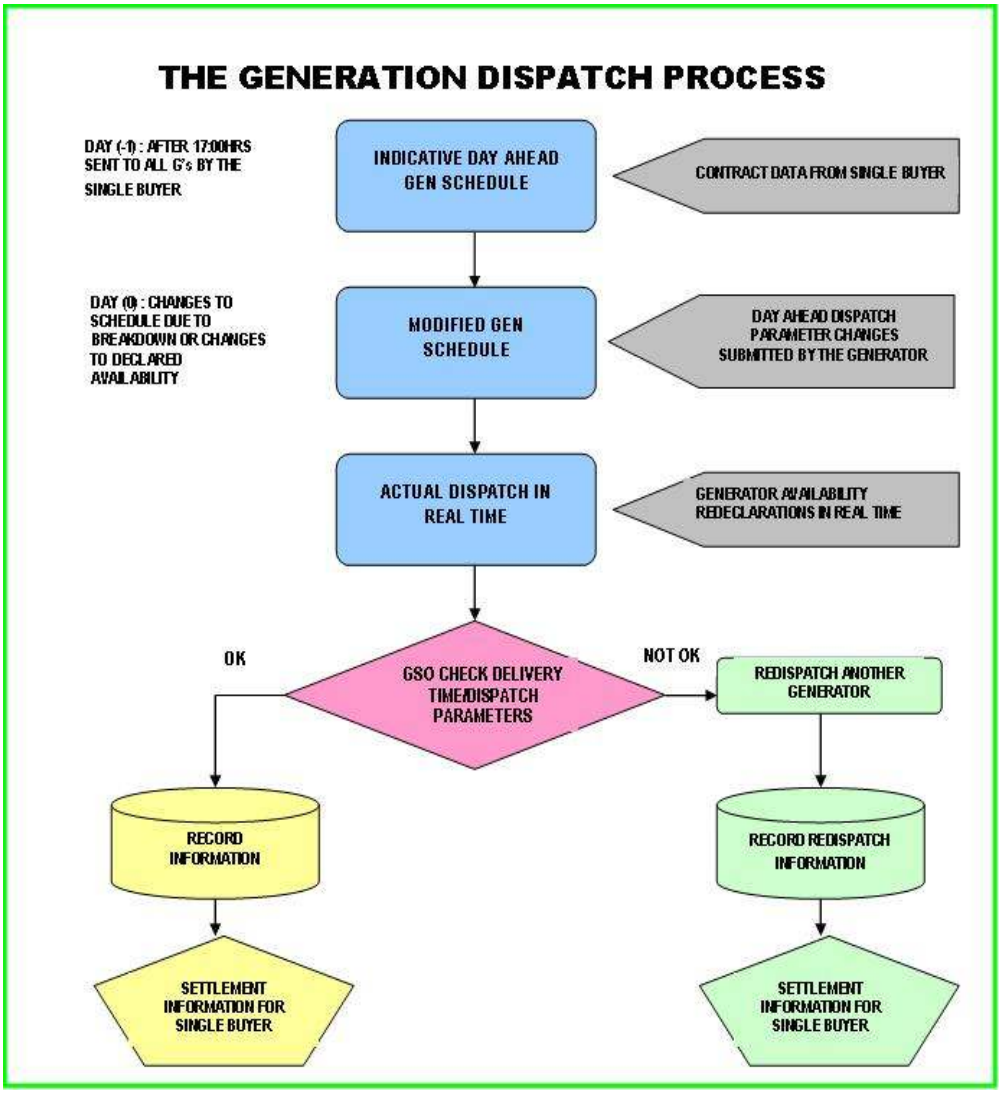

Part I: Glossary and Definitions

GD1 General

GD1.1 This part of the Grid Code provides the definitions of terms used in the Grid Code.

GD2 Terms and Definitions

Term	Definition
AC	An abbreviation denoting Alternating Current.
AC Interconnection	An **AC** connection between the Peninsular Malaysian Power System and a neighbouring Power System.
Act	The Electricity Supply Act 1990 (Act 447), including any modification, extension or re-enactment thereof and any subsidiary legislation made there under.
Active Circuits	Those transmission circuits that have a CDGU connected and/or which adversely impact upon a CDGU's Dispatch capability if they are not available (for example due to creating a constraint on the CDGU).
Active Energy	The electrical energy produced, flowing or supplied by an electric circuit during a time interval, being the integral with respect to time of the instantaneous power, measured in units of watt-hours or standard multiples thereof, i.e.: 1000 Wh = 1 kWh 1000 kWh = 1 MWh 1000 MWh = 1 GWh 1000 GWh = 1 TWh
Active Power	The product of voltage and the in-phase component of alternating current measured in units of watts and standard multiples thereof, i.e.: 1000 Watts = 1 kW 1000 kW = 1 MW 1000 MW = 1 GW 1000 GW = 1 TW

Term	Definition
Active Power Reserve	The **Active Power** output held in reserve by part loading of a **Generating Unit** equal to the difference between the full output capability and the part loaded output.
Agreement	Any technical and/or commercial agreement signed between two or more parties in the Malaysian Electricity Supply Industry.
Alternate Fuel	The fuel defined by the **Single Buyer** as the alternate fuel as part of the relevant **Agreement**.
Annual Peak Demand Conditions	The highest electricity demand in MW recorded or forecasted by the Grid Owner in any one (1) year under the prevailing system conditions.
Apparatus	Any electrical apparatus and includes the device or fitting in which a conductor is used, or of which it forms part of.
Apparent Power	The product of **Voltage** and current measured in units of voltamperes and standard multiples thereof, in an AC system i.e.,: 1000 VA = 1 kVA 1000 kVA = 1 MVA
Area Manager	A manager appointed by **TNB Transmission** whose management unit is a geographical area embracing part of the **TNB Transmission System**.
Associated Users	A **User** who does not own a **Metering Installation** but has fiscal and contractual interest in the test results or data flowing from the **Metering Installation**. For the avoidance of doubt the **Associated User** includes a **Consumer** who has such an interest.
Authorized Person	Any person other than the **GSO** in its capacity as operator of the **Grid System** who is authorized by or licensed under the **Act** to undertake activities related to **Generation, Transmission** or **Distribution** of electrcity.

Term	Definition
	An authority issued by the owner of a site which grants the holder the right to unaccompanied access to sites containing exposed **HV** conductors.
Automatic Generation Control (AGC)	The equipment fitted to a **Generating Unit** that automatically responds to signals from equipment at **NLDC** to adjust the output of selected **Generating Units** in response to a **Frequency Deviation and/or power flow on Interconnector** usually for load following purposes.
Automatic Switching Equipment	Any switching equipment which carries out automatic switching of **Plant**, **Apparatus** and **Equipment** based upon a pre-arranged set of instructions, sequence and timing.
Automatic Voltage Regulator (AVR)	A continuously acting automatic excitation system to control a **Generating Unit** terminal voltage.
Auxiliary Gas Turbines	Same as **Auxiliary Gas Turbine Unit.**
Auxiliary Gas Turbine Unit	A **Gas Turbine** engine driving a **Generating Unit** which can supply a **Unit Board** or **Station Board**, which can start without an electrical power supply from outside the **Power Station** within which it is situated.
Auxiliary Diesel Engines	A diesel engine driving a **Generating Unit** which can supply a **Unit Board** or **Station Board**, which can start without an electrical power supply from outside the **Power Station** within which it is situated.
Availability	A measure (or the length) of time for which a **Generating Unit**, transmission line, or any other system component or facility is capable of providing service when energised, irrespective of whether or not it is actually in service.
Availability Declaration	The declaration made by each **Generator** to the **GSO and Single Buyer** in the **Operational Planning Phase** in relation to the **Availability** and the level of availability of his **Generating Units** for operation at

Term	Definition
	specific time periods. Or A submission by each **Generator** in respect of each of its **Dispatch Units** and by each **Externally Interconnected Party** in respect of its transfers, to the **GSO and Single Buyer** stating whether or not such **Generating Unit** or **CD CCGT Module** or **Interconnector Transfer**, as the case may be, is proposed by that **Generator** to be available for generation in respect of the next following (or as the case may be, the existing **Availability Declaration Period**) **Availability Declaration Period** and, if so, the **Offered Availability**, in respect of any time period during such **Availability Declaration Period**.
Availability Declaration Period(s)	The period beginning at 00:00 and ending at 24:00 hours on the **Schedule Day**.
Availability Notice	A notice given by each **Generator** to the **GSO and Single Buyer** in respect of each **Centrally Dispatched Generating Unit**.
Availability Test	A test to establish the compliance of a **Generating Unit** with its **Declared Availability**.
Average Conditions	That combination of weather elements within a period of time which is the average of the observed values of those weather elements during equivalent periods over many years (sometimes referred to as normal weather).
Back-Up Protection or Back-Up Protection System	**Protection** equipment or system which is intended to operate when a **Grid System** fault is not cleared in due time because of failure or inability of the **Main Protection** to operate or in case of failure to operate of a circuit-breaker other than the associated circuit breaker.
Basic Impulse Insulation Level (BIL)	The basic impulse insulation level to which all the insulation on the **Transmission System** is designed, procured, installed, operated and maintained.
Billing	A process involving gathering metering data, calculation of payments in accordance with the Billing Rules and

Term	Definition
	ends with the issue of invoice.
Billing Period	The period of usually one (1) calendar month for fiscal settlement defined in the relevant **Agreement**.
Billing System	Those assets of the **Single Buyer** , systems and procedures for the calculation in accordance with the **Billing Rules** of payments which become due thereunder, as modified from time to time.
Black Start	The procedure necessary for a recovery from a **Total Blackout** or **Partial Blackout**. Or The procedure necessary for a recovery from a **Total Blackout** or **Partial Blackout** of the **Grid System**. It is initiated by the **GSO** or by a party authorised by the **GSO** and progressed under the direction of the **GSO**.
Black Start Capability	The ability of a **Power Station** equipped for **Black Start** capability, that is the capability to **Start – Up** at least one of its **Generating Units** from total **Shutdown** and to energise a part of the **Grid System** and to be synchronised to the **Grid System** upon instruction from the **GSO**, within a set time period agreed with the **GSO**, without any external electrical power supply.
Black Start Generating Unit (BSGU)	A **Generating Unit** capable of **Black Start.**
Black Start Generating Unit Test	A **Black Start Test** carried out on a **Centrally Dispatched Generating Unit** or a **CCGT Unit**, as the case may be, at a **Black Start Power Station** while the **Black Start Power Station** remains unconnected to an external electrical supply.
Black Start Power Stations or **Black Start Stations**	**Power Stations** which are registered by the **Single Buyer** and the **GSO**, pursuant to the relevant **Agreement**, as having a **Black Start Capability**.
Black Start Test or Black Start Station	A **Black Start Test** carried out by a **Generator** with a **Black Start Station**, on the instructions of the **GSO**, in

Term	Definition
Test or Black Start Power Station Test	order to demonstrate that a **Black Start Station** has a **Black Start Capability** while the **Black Start Station** is disconnected from all external electrical supplies.
Blue Warning	A **System Warning** issued by the **GSO** related to the system operating conditions when there may be **Inadequate System Margin**.
Brown Warning	A **System Warning** issued by the **GSO** related to the system operating conditions when there may be a **Risk of System Disturbance**.
Business Day	Any week day (other than a Sunday) on which banks are open for domestic business in the city of Kuala Lumpur.
Cancellation of GSO System Warning	The notification given to **Users** by the **GSO** when a **GSO System Warning** is cancelled.
Cancelled Start	A response by a **Generator** to an instruction from the **GSO** cancelling a previous instruction to **Synchronise** to the **System** or come to **Hot Standby**, before **Synchronisation** has been completed or **Hot Standby** reached.
Capacity	A general term referring to the power output or power carrying capacity or rating of **Generation**, **Transmission** and **Distribution Plant** or **Apparatus** or **Equipment**.
Caution Notice	A written notice clearly visible to personnel affixed near an isolating device to warn of the state of the isolating device with respect to safety.
CCGT (Combined Cycle Gas Turbine) Module	A collection of **Generating Units** (registered as a **CCGT Module** under the **PC**) comprising one or more **Gas Turbine Units** (or other gas based engine units) and one or more **Steam Units** where, in normal operation, the waste heat from the **Gas Turbines** is passed to the water/steam system of the associated **Steam Unit** or **Steam Units** and where the component **Units** within the **CCGT Module** are directly connected by steam or hot gas lines which enable those **Units** to

Term	Definition
	contribute to the efficiency of the combined cycle operation of the **CCGT Module**.
CCGT Module Planning Matrix	A matrix in the form set out in **OC2** showing the combination of **CCGT Units** within a **CD CCGT Module** which would be running in relation to any given MW output.
CCGT Unit	A **Generating Unit** within a **CCGT Module**.
CDGU's Operating Reserve	The **Operating Reserve** of a **Centrally Dispatched Generating Unit**.
CDGU Registered Capacity	The **Registered Capacity** of a **Centrally Dispatched Generating Unit**.
CDGU Two Shifting Limit	The **Two Shifting Limit** of a **Centrally Dispatched Generating Unit**.
Central Dispatch	The process of **Real-Time Scheduling** and issuing direct operational instructions by the **GSO** to **Generating Units**.
Centrally Dispatched Generating Unit (CDGU)	A **Generating Unit** (other than a **CCGT Unit**) which is centrally dispatched by **GSO.**
Chairman	The Chairman of the **Malaysian Grid Code Committee**.
Check Meter	A **Meter**, other than a **Main Meter**, used as a back-up source of **Metering Data** for certain types of **Metering Installations**.
Check Metering Installation or a Check meter Installation	A **Metering Installation**, other than a **Main Metering Installation**, used as a back-up source of **Metering Data** for certain types of **Metering Installation**.
Check Metering Data	The **Data** recorded by and stored in a **Check Meter installation**.
Circuit Breaker Fail	The protection system installed to automatically open

Term	Definition
Protection	other circuit breakers that can isolate a transmission circuit or equipment when the main circuit breaker installed for the purpose fails to operate correctly in response to a signal received from the associated **Main** or **Back-up Protection**.
Code	In general a set of rules defining appropriate action, conduct and behaviour and in particular any one of the Chapters or Sections or clauses of this **Grid Code** mentioned in context.
Commercial Operation Date	The date at which all testing of a **Power Station** or a **Generating Unit** or a **Grid System Development** or a **User Development** is completed and the plant is certified by the relevant party (e.g., **Single Buyer**, the **GSO**, **TNB Transmission** or a **User**) for commercial use with the **Grid System**.
Commissioning	The activity undertaken by the **Grid Owner, User** or the **GSO** to prepare **Plant**, **Apparatus**, **Equipment** or **System** for connection to and operation within the **Grid System**.
Commissioning Test	A test or a series of tests for establishing, by measurement, the characteristics of **Plant** or **Apparatus** or **Equipment** are in accordance with the specified **Equipment** standards and its fitness for connection to and continuous operation on the **Grid System** without any adverse effects.
Committed Project Data	Data relating to a **User Development** submitted by the **User** to the **Grid Owner,** and to the **Single Buyer** once the relevant **Agreement** for connection to the **Grid System** is signed.
Compliance Test	A test or a series of tests for establishing the compliance of a **Plant** or **Apparatus** or system with the relevant clauses of the **Grid Code** and any additional clauses in the relevant **Agreement**.
Communication Protocol	A protocol or procedure established to facilitate the exchange of relevant **Data** in a timely and orderly

Term	Definition
	manner.
Completion Date	The date when a **User** is expected to connect to or start using the **Transmission System**.
Complexes or Complex	A **Connection Site** together with the associated **Power Station** and/or **Network Operator** substation and/or associated **Plant** and/or **Apparatus**, as appropriate.
Connection	The physical connection of **Plant**, **Apparatus** or **Equipment** or a **User System** to the **Grid System** or **User System**.
Connection Application	The application made by a **User** to the **Grid Owner** and **GSO** for connection of **Plant**, **Apparatus** or **Equipment** or a **User System** to the **Grid System** or **User System**.
Connection Code	That **Part** of the **Grid Code** which is identified as the **Connection Code**.
Connection Point	The agreed point of connection established between the **Transmission System** or a **Network Operator's System** or **User's System**, as the case may be, and a **User** seeking connection to any one of those systems.
Connection Site	A **TNB Transmission Site** or a **User Site**, as the case may be.
Constrained Schedule	The **Generation Schedule** after all the **Transmission Constraints** are fully taken into account.
Consumer	A person who is supplied with electricity or whose premises are connected for the purpose of supply of electricity by a supply authority or licensee.
Consumer Demand	The electricity **Demand** of an individual, a group or all of the **Consumer(s)** on the Peninsular Malaysian Power System.

Term	Definition
Contingency Planning and System Restoration (Operating Code No 7)	That **Part** of the **Operational Codes** of this **Grid Code** which is identified as the **Operating Code No 7 – Contingency Planning and System Restoration (OC7)**.
Contracted Project Data	The **Data** required to be submitted by the **User** in accordance with the **Planning Code** after completion and signing of the relevant **Agreement**.
Control Calls	A telephone call whose destination and/or origin is a key on the control desk telephone keyboard at **NLDC** or a **GSO Control Centre** and which has the right to exercise priority over (i.e., disconnect) a call of a lower status.
Control Centre	A location used for the purpose of control and operation of the **Transmission System** or a **User System** other than a **Generator's System**.
Control Engineer	The person(s) authorised to undertake **Grid System** control activity from a **NLDC** or a **GSO Control Centre**.
Control Operation	A general term used to describe the continuous real time control activity undertaken for coordinated control of the **Grid System**.
Control Person	The term used as an alternative to "**Safety Coordinator**" only on the **Site Responsibility Schedule**.
Control Point	The point from which:- (a) a **Directly Connected Customer's Plant** and **Apparatus** is controlled; or (b) a **Demand Reduction Block** is co-ordinated**;** or (c) a **Power Station** is physically controlled by a **Generator**, as the case may be. For a **Generator** this will normally be at a **Power Station**.
Control Room	A general term used to describe the main room at a **Control Centre** where the **Control Persons** undertake

Term	Definition
	the control activities for operating the specific **Plant**, **Apparatus**, **Equipment**, **User System** or **Grid System**.
Control, Scheduling and Dispatch (SDC2)	That **Part** of the **Real-Time Re-Scheduling and Dispatch Code** of this **Grid Code** which is identified as the **Control, Scheduling and Dispatch (SDC2)**.
Control Telephony	The method by which a **User's Responsible Engineer/Operator** and **GSO's Control Engineer(s)** speak to one another for the purposes of control of the **Total System** in both normal and emergency operating conditions.
Critical Incident	An incident which may prejudice the safety or security of the **Grid System** and may potentially lead to widespread disruption of electricity supplies.
Customer	A person to whom electrical power is provided (whether or not he is the same person as the person who provides the electrical power).
Customer Generating Plant	A **Power Station** or **Generating Unit** of a **Customer** to the extent that it operates the same exclusively to supply all or part of its own electricity requirements, and does not export electrical power to any part of the **Total System**.
Damping Ratio	A term used to describe the rate at which the amplitude of a **Power System** oscillation frequency, represented by a complex pair of eigenvalues ($\sigma \pm j\omega$), will decay as given by the expression: $\varsigma(\%) = \frac{-\sigma}{\sqrt{\sigma^2 + \omega^2}} \times 100$ where ς is termed as the **Damping Ratio**.
Data	Any piece of information, parameter or sets of parameters in pursuance of enabling compliance with this **Grid Code**.
Data Collection System (or Automatic Data	The data collection system for use in the calculation of payments due for electricity supplied or received.

Term	Definition
Collection System)	
Data Consistency Rules	The rules relating to consistency of data submitted under the **SDCs**, to be applied by the **Single Buyer** under the **Grid Code** to data used in the software of the **Single Buyer** to prepare the **Generation Schedule**.
Data Entry Terminals	**GSO's Data Entry Terminals** accommodated by each **User** at points agreed by the **User** and **GSO** for the purposes of information exchange with **GSO**.
Data Loggers	A form of a data recorder which records and stores large amounts of measurement data at specific time intervals which can be locally and remotely interrogated.
Data Registration Code	That **Part** of the **Grid Code** which is identified as the **Data Registration Code**.
Data Validity and Default Rules	The rules relating to validity of data, and default data to be applied, in relation to data submitted under the **SDC's,** to be applied by the **Single Buyer** under the **Grid Code** to data used in the software of the **Single Buyer** to prepare the **Generation Schedule**.
DC	An abbreviation denoting Direct Current.
Declared Availability	The availability of a **Generating Unit** or **Interconnector Transfer** as proposed by a **Generator** or an **Externally Interconnected Party** in respect of the next **Availability Declaration Period**.
Demand or Load	The demand of MW and MVAr of electricity (i.e. both **Active** and **Reactive Power**), unless otherwise stated.
Demand Control	Any or all of the following methods of achieving a **Demand** reduction: (a) **Customer Demand Management** initiated by **Users**; (b) **Customer** voltage reduction initiated by **Users** (other than following an instruction from the **GSO**); (c) **Customer Demand** reduction by **Disconnection** initiated by **Users** (other than following an instruction from the **GSO**);

Term	Definition
	(d) **Customer Demand** reduction instructed by the **GSO**; (e) automatic low **Frequency Demand Disconnection**; (f) emergency manual **Demand Disconnection**. (g) Automatic low voltage demand disconnection (h) Automatic demand disconnection through inter-tripping.
Demand Control (OC4)	That **Part** of the **Operational Codes** of this **Grid Code** which is identified as the **Demand Control (OC4)**.
Demand Control Imminent	A **System Warning** issued by the **GSO**, in accordance with **SDC2**, to respective **Users** who may subsequently receive instructions to reduce **Demand** in accordance with **OC4**.
Demand Forecast	The forecast of the total **Demand** for the **Transmission System** for **Planning** and **Operational** purposes.
Demand Forecasting (OC1)	That **Part** of the **Operational Codes** of this **Grid Code** which is identified as the **Demand Forecasting (OC1)**.
Demand Reduction	The reduction in **Demand** that must be implemented by each **User** upon the instruction(s) received from the **GSO** under specific **Grid System** operational conditions.
Demand Reduction Block	The size of the demand that can be reduced by a **User** upon instruction by the **GSO** or through equipment operated at **NLDC** or a **GSO Control Center**.
Demand Shedding	Disconnection of **Load** from the **Grid System** for the purpose of **Demand Control**.
Demand Supply Point	The point on the **Transmission System** from which the **Demand** of a **Directly Connected Customer** and/or a **User's System** and/or a **Network Operator's System** is supplied.
Derogation	An order issued by the **EC,** after full consultation and agreement with the **GSO** and the **Grid Code Committee,** permanently or temporarily for a strictly defined and specific period permitting the **GSO** and/or a

Term	Definition
	specific **User** non-compliance with specific provisions of the **Grid Code**. The temporary derogation being withdrawn by the **EC** after completion of period and ascertaining of completion of remedy by the **GSO** or the **User** as the case may be.
Derogated Party	The **Party** or **Parties** subject to a permanent or temporary derogation order issued by the **EC**.
Derogation Procedure	A procedure for granting of **Derogation** – normally for a specific period of time – to allow a party to continue operation despite being unable to comply with all the requirements of this **Grid Code**.
Designed Minimum Operating Level	The output (in whole MW) below which a **Dispatch Unit** has no **High Frequency Response** capability.
De-Synchronising	The act of taking a **Generating Unit** off the **Grid System** or **User System** to which it has been **Synchronised**, by opening any connecting circuit breaker and the term "**De-Synchronising**" shall be construed accordingly.
De-Synchronise	The instruction issued by the **GSO** to a **Generator** for taking off a **Generating Unit** off the **Grid System** or **User System**.
De-Synchronisation	The process of "**De-Synchronising**" a **Generating Unit**.
Detailed Planning Data	Detailed additional data which the **Grid Owner** requires under the **PC** in support of **Standard Planning Data**. Generally it is first supplied once a relevant **Agreement** is concluded.
Directly Connected Customer	A **Customer** in Peninsular Malaysia, except for a **Network Operator** acting in its capacity as such and receiving electricity direct from the **Transmission System**.
Directly Connected Customer's	The **Apparatus** belonging to or owned by a **Directly Connected Customer**.

Term	Definition
Apparatus	
Discrimination	The quality where a relay or protective system is enabled to pick out and cause only the faulty **Apparatus** to be disconnected.
Dispatch	The issue by the **GSO** of instructions for **Generating Plant** to achieve specific **Active Power** and/or **Reactive Power** or target voltage levels within the **Generation Scheduling and Dispatch Parameters** and by stated times.
Dispatch Unit	A **Centrally Dispatched Generating Unit** or a **CCGT Module**, as the case may be.
Distribution Code	A document that sets out the principles governing the relationship between the **GSO**, **EC**, **Customers** and all **Users** of the **Distribution System.**
Distribution Network (or Distribution System)	The system consisting (wholly or mainly) of electric lines which are owned or operated by a **Distribution Licensee (Distributor)** and used for the distribution of electricity from **Grid Supply Points** or **Generating Units** or other entry points to the point of delivery to **Customers** or other **Distributors**. "Distribution electricity network" means a system or part of a system at nominal voltage of less than 132 kilovolts of electric lines or cables, substations and associated equipment and buildings for transporting electricity to any person, regardless of whether a generating plant is connected to such system.
Distributor	A person who is licensed under Section 9 of the **Act** and is connected to the **Grid System** and distributes electricity for the purpose of enabling a supply to be given to any premises. "Distribute" means to operate, maintain and distribute electricity through the electricity distribution network.
Distribution System	Refer to Distribution Network.

Term	Definition
Dispatch Instruction	An instruction issued by the **NLDC** requiring a **Generating Unit** or a **Power Station** to undertake a specific operational action at a specific time.
Dispatch Ramp Rate	The rate at which a **Generating Unit** is dispatched to increase or decrease its output by the **NLDC**.
Distributed Generation	**Small Generation Plant** embedded in a **User Network** or **Distribution System**.
Dynamic Spinning Reserve	The **Active Power** (MW) reserve held on part-loaded generators operating on the system which can automatically be delivered over a short timescale of some seconds in response to a fall in **System Frequency**.
Earth Fault Factor	At a selected location of a three-phase **System** (generally the point of installation of equipment) and for a given **System** configuration, the ratio of the highest root mean square phase-to-earth power **Frequency** voltage on a sound phase during a fault to earth (affecting one or more phases at any point) to the root mean square phase-to-earth power **Frequency** voltage which would be obtained at the selected location without the fault.
Earthing	A way of providing a connection between conductors and earth by an **Earthing Device** which is either: (a) immobilised and **Locked** in the **Earthing** position. Where the **Earthing Device** is **Locked** with a **Safety Key**, the **Safety Key** must be secured in a **Key Safe** and the **Key Safe Key** must be retained in safe custody; or (b) maintained and/or secured in position by such other method which must be in accordance with the **Local Safety Instructions** of **TNB Transmission** or that **User**, as the case may be.
Electrical Equipment Standards	Commonly used Malaysian and International standards relating to electrical equipment prepared by reputable standards institutions such as MS, IEC, EN, DIN etc.
Electricity Industry	All the parties associated with the generation,

Term	Definition
	transmission, distribution and use of electrical energy and the institutions related to the governance thereof.
Electricity Supply Act	The Electricity Supply Act 1990, including any modification, extension or re-enactment thereof and any subsidiary legislation made there under.
Electricity Regulations	The Electricity Regulations 1994, including any modification, extension or re-enactment thereof.
Embedded	Being a part of a **User System** but not directly connected to the **Transmission System**.
Embedded Generating Plant	A **Power Station** which is **Embedded** in a **User System.**
Embedded Generating Unit	A **Generating Unit** which is **Embedded** in a **User System**.
Embedded Minor Generating Plant	Any **Embedded Generating Plant** with a **Registered Capacity** of less than 30MW.
Embedded Power Stations	**Power Stations** which is **Embedded** in a **User System**.
Embedded Minor Power Stations	Any **Embedded Power Station** with a **Registered Capacity** of less than 30MW.
Embedded Range CCGT Module	A **Range CCGT Module** which is **Embedded** in a **User System**.
Embedded Small Generating Plant	Any **Embedded Generating Plant** with a **Registered Capacity** of 30MW to 50 MW.
Emergency Instructions	A **Dispatch** instruction issued by the **GSO,** pursuant to **SDC2**, to a **Dispatch Unit** or a **CCGT Unit** within a **CD CCGT Module** which may require an action or response which is outside **Generation Scheduling and Dispatch Parameters, Generation Other Relevant Data** or **Notice to Synchronise.**

Term	Definition
Energy (Active and Reactive)	Carrying the meaning **of Electrical Energy** see definitions of **Active** and **Reactive Energy**.
Energy Commission (EC)	**Suruhanjaya Tenaga** or **Energy Commission** established under the Energy Commission Act 2001 (Act 610).
Energy Commission Act	The Energy Commission Act 2001 (Act 610) including any modification, extension or re-enactment thereof and any subordinate legislation made there under.
Energy Data	All **Data** relating to the measurement of **Energy**.
Energy Measurement	The measurement of **Active Energy** and **Reactive Energy.**
Energy Requirements	The annual requirements for electrical energy of Peninsular Malaysia.
Engineering Recommendation	The documents referred to as such and issued by the former Electricity Council (prior to 1990) in UK and the present Electricity Association.
Engineering Recommendation P28	The "Engineering Recommendation P28, Issued by The Electricity Council of UK in 1989 entitled "Planning Limits for Voltage Fluctuation Caused by Industrial, Commercial and Domestic Equipment in the United Kingdom"".
Equipment	Includes any item for such purposes as generation, conversion, transmission, distribution or utilization of electrical energy, such as machines, transformers, **Apparatus**, measuring instruments, protective devices, wiring materials, accessories and appliances.
Estimated Registered Data	Those items of **Standard Planning Data** and **Detailed Planning Data** which either upon connection will become **Registered Data**, or which for the purposes of the **Plant** and/or **Apparatus** concerned as at the date of submission are **Registered Data**, but in each case which for the ten (10) succeeding years will be an estimate of

Term	Definition
	what is expected.
Event(s)	An unscheduled or unplanned (although it may be anticipated) occurrence on, or relating to, a **System** (including **Embedded Generating Plant**) including, without limiting that general description, faults, incidents and breakdowns and adverse weather conditions being experienced.
Excitation Loop	The closed loop control portion of the **Excitation System** controlling the **Generating Unit** terminal **Voltage**.
Excitation System	The equipment providing the field current of a machine (**Generating Unit**), including all regulating and control elements, as well as field discharge or suppression equipment and protective devices.
Excitation System On-Load Positive Ceiling Voltage	Shall have the meaning ascribed to the term 'Excitation system on load ceiling voltage' in **IEC** 34-16-1:1991.
Excitation System No-Load Negative Ceiling Voltage	Shall have the meaning ascribed to the term 'Excitation system no load ceiling voltage' in **IEC** 34-16-1:1991.
Excitation System No-Load Positive Ceiling Voltage	Shall have the meaning ascribed to the term 'Excitation system no load ceiling voltage' in **IEC** 34-16-1:1991.
Excitation System Nominal Response	Shall have the meaning ascribed to that term in **IEC** 34-16-1:1991 .
Exciter	The source of the electrical power providing the field current of a synchronous machine (**Generating Unit**).
Exemption	An order issued by the **EC,** after full consultation and agreement with the **GSO,** exempting a specific **Generating Unit** or **Generating Plant** or **Power Station** or **User** from undertaking certain duties specified in the **Grid Code** or non-compliance with

Term	Definition
	specific provisions of the **Grid Code** in acceptance of the implied technical and economic consequences in the operation of the **Grid System**.
Export	The supply of **Power** or **Energy** into the **System** of an **Externally Interconnected Party**.
Externally Interconnected Party	A person who operates an **External System** which is connected to the **Transmission System** or a **Distribution System** by an **External Interconnection**.
External Interconnection	**Apparatus** for the transmission of electricity to or from the **Transmission System** or a **Distribution System** into or out of an **External System**. For the avoidance of doubt, a single **External Interconnection** may comprise several circuits operating in parallel.
Externally Interconnected Party	A person who operates an **External System** which is connected to the **Transmission System** or a **Distribution System** by an **External Interconnection**.
External System	In relation to an **Externally Interconnected Party** means the transmission or distribution system which it owns or operates which is located outside Peninsular Malaysia and any **Apparatus** or **Plant** which connects that system to the **External Interconnection** and which is owned or operated by such **Externally Interconnected Party**.
Fast-Start Capability	The ability of a **Dispatch Unit** to be **Synchronised** and **Loaded** up to full **Load** within five (5) minutes.
Fault Current Interruption Time	The time interval from fault inception until the end of the break time of the circuit breaker (as declared by the manufacturer).
Fault Disconnection Facilities	In cases where no **TNB Transmission** circuit breaker is provided at the **User's** connection voltage, the facilities provided by the **User** to trip the **User's** circuit breakers and the higher voltage circuit breakers of **TNB Transmission** to isolate faults on the **User** system or the **TNB Transmission System**.

Term	Definition
FACTS Devices	Family of power electronics based and other static controllers to enhance controllability and increase power transfer capability in electric power systems such as STATCOM (Static Synchronous Compensator) or Unified Power Flow Controller (UPFC).
Final Report	The report prepared by the **User** after satisfactory completion of **Compliance Tests** and submitted to the **Single Buyer, Grid Owner** and **GSO**.
Five Minute Reserve	That component of the **Operating Reserve** which is fully available within five (5) minutes from the time of **Frequency** fall or a **Dispatch** instruction pursuant to **SDC2**, and which is sustainable for a period of four (4) hours.
Flicker Severity (Long Term)	A value derived from twelve (12) successive measurements of **Flicker Severity** (**Short Term**) (over a two hour period) and a calculation of the cube root of the mean sum of the cubes of twelve (12) individual measurements, as further set out in Engineering Recommendation P28 .
Flicker Severity (Short Term)	A measure of the visual severity of flicker derived from the time series output of a flicker meter over a ten (10) minute period and as such provides an indication of the risk of **Customer** complaints as further set out in **Engineering Recommendation** P28.
Fluctuating Loads	**Loads** connected to the **Grid System** or **User System(s)** exhibiting non-linear and/or randomly varying and/or special characteristics which may cause violation of the **Power Quality Standards** at the **Connection Point** and/or materially and adversely affect other **Users** or normal operation of **Plant**, **Apparatus** and **Equipment** connected to the **Grid System** or **User System(s)** and may require installation of special measures or operational restrictions to mitigate or eliminate their adverse effects.
Forced Outage	An unplanned or unscheduled outage as the case may be

Term	Definition
	and/or as defined in relevant **Agreement**.
Forecast Data	Those items of **Standard Planning Data** and **Detailed Planning Data** which will always be forecast.
Forecast Demand	The forecast **Demand** of MW and MVAr of electricity (i.e. both **Active** and **Reactive Power**), by the **Grid Owner** aggregating the demand forecasts submitted by the **Users** and taking economic factors affecting electricity use into account.
Frequency	The number of alternating current cycles per second (expressed in Hertz) at which a **System** is running.
Frequency Sensitive Mode	An operating mode which will result in **Active Power** output changing, in response to a change in **System Frequency**, in a direction which assists in the recovery to **Target Frequency**, by operating so as to provide **Primary Response** and/or **Secondary Response** and/or **High Frequency Response.**
Gas Turbine Unit	A **Generating Unit** driven by a gas turbine (for instance by an aero-engine) as its prime mover.
Gas Zone Diagram	A single line diagram showing boundaries of, and interfaces between, gas-insulated **HV Apparatus** modules which comprise part, or the whole, of a substation at a **Connection Site,** together with the associated stop valves and gas monitors required for the safe operation of the **Transmission System** or the **User System**, as the case may be.
Generation	The **Generating Plant** and **Power Stations** in Peninsular Malaysia.
Generation Adequacy	The adequacy of the **Generation Capacity** available to meet the peak power demand and overall annual energy demand in accordance with specific criteria providing an adequate margin as defined by the **Generation Reliability Standard**.
Generation Capacity	A general term used to indicate the total installed

Term	Definition
	Generating Plant capacity connected to the **Power System**.
Generation Development Plan	The annual report submitted by the **Grid Owner** to the **EC** calculating the generation capacity requirements for the next ten (10) years in accordance with the **Generation Reliability Standard**.
Generation Other Relevant Data	Those parameters listed in Appendix 2 of **OC2.**
Generation Planning Parameters	Those parameters listed in Appendix 2 of **OC2**.
Generation Plant	Has the same meaning as **Generating Plant**.
Generating Plant	A **Power Station** subject to **Central Dispatch**
Generating Station	Has the same meaning as the **Power Station**
Generating Unit	Unless otherwise provided in the **Grid Code**, any **Plant** and/or **Apparatus** which produces electricity, including, for the avoidance of doubt, a **CCGT Unit**.
Generating Unit Scheduling	The activity of **Scheduling** the **Generating Units** in **Power Stations** for operation the next day in an order to meet the changing **Demand** over the twenty four (24) hour period from midnight on the day before to midnight the next day.
Generation Reliability Standard	The **Standard** which relates to provision of sufficient firm **Generation Capacity** to meet the **Demand** with a sufficient margin.
Generation Schedule	A statement, prepared and issued by the **Single Buyer** under **SDC1**, of which **Dispatch Units** and **Interconnector Transfers** may be required to ensure (so far as possible) the integrity of the **Grid System**, the security and quality of supply and that there is sufficient generation to meet **Demand** at all times (to the extent possible) together with an appropriate margin of reserve.

Term	Definition
Generation Scheduling and Dispatch Parameters	Those parameters listed in o **SDC1** under the heading **Generation Scheduling and Dispatch Parameters** relating to **Dispatch Units**.
Generator	A person who is Licenced by the EC to generate electricity in Peninsular Malaysia.
Generator's Control Point	The point from which the **Power Station** or **Generating Plant** of a **Generator** is physically controlled.
Generator's Control Room	The room used for the purpose of control and operation of a **Generator's Power Station**.
Generator's Power Station	The **Power Station** owned, operated and maintained by a specific **Generator**.
Generator Performance Chart	A diagram which shows the MW and MVAr capability limits within which a **Generating Unit** will be expected to operate under system steady state operational conditions.
Generator's System	The **Connections**, **Plant**, **Apparatus** and **Equipment** in a **Power Station** owned, operated and maintained by a **Generator.**
Glossary and Definitions	That **Part** of the **Grid Code** which is identified as the **Glossary and Definitions (GD)**.
Government Agencies	Various agencies of the Government of Malaysia.
Grid Code	A document that sets out the principles governing the relationship between the **GSO, EC, Grid Owner, Single Buyer** and all **Users** of the **Grid System.**
Grid Code Committee	The committee responsible for keeping the **Grid Code** under review in accordance with the rules and procedures defined under the **General Conditions** of this **Grid Code**.
Grid Code Effective Date	The date at which the **Grid Code** becomes effective.

Term	Definition
Grid Code Dispute Resolution Procedure	The procedure for resolution of **Grid Code** related disputes given in the **General Conditions** of this **Grid Code**.
Grid Entry Point	A point at which a **Generating Unit** or a **CCGT Module** or a **CCGT Unit**, as the case may be, which is directly connected to the **Transmission System**.
Grid Owner	The party that owns the high voltage backbone Transmission System and is responsible for maintaining adequate Grid capacity in accordance with the provisions of the Grid Code and License Standards (refer to TNB Transmission).
Grid Supply Point	A point of supply from the **Transmission System** to **Distributors**, **Network Operators** or **Directly Connected Customers**.
Grid System	**Transmission System** with directly connected **Generating Unit** and **Directly Connected Customers.**
Grid System Operator (GSO)	A part of TNB which is responsible for operational planning, real-time re-scheduling, dispatch and control of the **Grid System** in compliance with the provisions of the **Grid Code** and coordinates all parties connected to the Grid System.
GSO Control Engineers	The **Control Engineers** at **NLDC**.
GSO Data Entry Terminals	Refer to Data Entry Terminals.
GSO System Warnings	**Warnings** related to **Grid System** operation issued by the **GSO** to the **Users**.
High Frequency Response	An automatic reduction in **Active Power** output of a **Generating Unit** in response to an increase in **System Frequency** above the **Target Frequency** (or such other level of **Frequency** as may have been agreed in a relevant **Agreement**). This reduction in **Active Power** output must be in accordance with the provisions of the relevant **Agreement** which will provide that it will be

Term	Definition
	released increasingly with time over the period 0 to 10 seconds from the time of the **Frequency** increase on the basis set out in the relevant **Agreement** and fully achieved within ten (10) seconds of the time of the start of the **Frequency** increase and it must be sustained at no lesser reduction thereafter. The interpretation of the **High Frequency Response** to a +0.5 Hz frequency change is shown diagrammatically in CC.A.3. This response requirement also arises from the need to protect the shaft system of a **Generating Unit** from consequential mechanical damage from an uncontrolled rise in speed associated with the high **Frequency**.
High Risk of Demand Reduction	A **System Warning** that may be issued by the **GSO** to **Users** at times when the **GSO** determines there is an increased risk of **Demand Reduction**.
High Voltage (HV)	In this Grid Code a nominal **Voltage** of 66kV or above.
High Speed Delayed Auto Reclosing	The process of automatic reclosure of circuit breakers clearing or isolating a fault quickly, after a specific time usually less than three (3) seconds, in the expectation that the fault is of transitory nature to affect rapid restoration of power flow.
House Load Operation	The operation of a **Power Station** or a **Generating Unit** at a load level where only the demand of the **Power Station** or **Generating Unit** is being met.
HV Apparatus	Means all **High Voltage (HV)** equipment, in which electrical conductors are used, supported or of which they may form a part.
HVDC Interconnection	An **Interconnection** employing **High Voltage Direct Current** conversion equipment at the sending and receiving end of the connecting transmission line which can provide bi-directional power flow from one power system to the other.
HV Generator Connections	**Plant** and **Apparatus** connected at the same voltage as that of the **Transmission System** including **User's** circuits, the higher voltage windings of **User's** transformers and associated connection **Plant** and

Term	Definition
	Apparatus.
Hydro Units	**Generating Units** where the prime movers and/or driving turbines are driven by water.
Import	The supply of **Power** or **Energy** into the **Grid System** from an **Externally Interconnected Party**.
Inadequate System Margin	A condition when the **GSO** determines that there is inadequate generation margin to meet **Demand**.
Independent Power Producer	A **Power Producer** having a **Power Purchase Agreement**.
Instructor Facilities	An outstation instruction panel which gives at least sixteen (16) bits electronic signals with an audible alarm and acknowledge facilities to return message acknowledgement to the **NLDC**.
Interconnection or Interconnector	The physical connection (consisting of **Plant** and **Apparatus**) connecting the **Transmission System** to an **External System**.
Interconnection Agreement	An agreement made between the **Single Buyer** and an **Externally Interconnected Party** relating to an **External Interconnection**.
Interconnected Party or Parties	The parties who are the signatories of an **Interconnection Agreement.**
International Specification	A commonly used **International** technical specification or a technical approval.
Intertrip Apparatus	**Apparatus** which performs **Intertripping** of **Plant** and **Equipment**.
Intertripping	(a) The tripping of circuit-breaker(s) by commands initiated from **Protection** at a remote location independent of the state of the local **Protection**; or **Operational Intertripping**.
Introduction and Purpose	That **Part** of the **Grid Code** which is identified as the **Introduction and Purpose (IP)**.

Term	Definition
Isolating Device	A device for achieving **Isolation**.
Isolation	The disconnection of **HV Plant** and **Apparatus** from the remainder of the **System** in which that **HV Plant** and **Apparatus** is situated by either of the following: (a) An **Isolating Device** maintained in an isolating position. The isolating position must either be: (i) maintained by immobilising and **Locking** the **Isolating Device** in the isolating position and affixing a **Caution Notice** to it. Where the **Isolating Device** is **Locked** with a **Safety Key**, the **Safety Key** must be secured in a **Key Safe** and the **Key Safe Key** must be retained in safe custody; or (ii) maintained and/or secured by such other method which must be in accordance with the **Local Safety Instructions** of **TNB Transmission** or the **User**, as the case may be; or an adequate physical separation which must be in accordance with and maintained by the method set out in the **Local Safety Instructions** of **TNB Transmission** or the **User**, as the case may be.
Joint System Incidents	An **Event** wherever occurring (other than on an **Embedded Generating Plant**) which, in the opinion of the **GSO** or a **User**, has or may have a serious and/or widespread effect, in the case of an **Event** on a **User(s) System(s)** (other than on an **Embedded Generating Plant**), on the **Transmission System**, and in the case of an **Event** on the **Transmission System**, on a **User(s) System(s)** (other than on an **Embedded Generating Plant**).
Key Safe	A safe where a **Safety Key** is secured.
Key Safe Key	A key use to lock and unlock the **Key Safe** for implementation of Safety Procedure in OC8.
Largest Power Infeed Loss Risk	The risk to the **Grid System** presented by the disconnection of the largest **Generating Unit** or

Term	Definition
	transmission line or **Interconnector** carrying the largest amount of power in terms of resulting system **Frequency** deviation.
Least Cost Dispatch	**Dispatch** of **Generation** and **Demand Control** that results in **Least Cost Operation** of the **Grid System**, on the day, taking into account all factors specified in **SDC1**.
Least Cost Generation Schedule	The schedule of **Generation** prepared for the following day that, at the time of preparation, would result in **Least Cost Operation** of the **Grid System**, taking into account all factors specified in **SDC1**, if **Dispatched** the following day.
Least Cost Operation	Operation of the **Grid System** at minimum cost taking into account all factors included in **SDC1** and any other factors (for example constraint costs) that may influence these costs.
Least Cost Schedule	The schedule of **Generation** and **Demand Control** prepared for the following day that, at the time of preparation, would result in the **Least Cost** of operation of the **Grid System**, taking into account all factors specified in **SDC1**, if dispatched the following day.
Licence(s)	Any licence granted to any **User**, under the **Electricity Supply Act**.
Licence Standards	Those standards relating to the reliability, security and quality of electricity supply prepared by the Licencee pursuant to the Licence approved by the EC.
Live Apparatus Working	Maintenance or refurbishment of energized **Transmission Plant** or **Apparatus** undertaken by **TNB Transmission**.
Load	The **Active**, **Reactive**, or **Apparent Power**, as the context requires, generated, transmitted, or distributed.
Loaded	A general term usually utilised meaning the state of a **Generating Unit** when supplying electrical power to the **Grid System** or a **User System**.

Term	Definition
Loading	A general term usually utilised meaning the output level of a **Generating Unit** supplying electrical power to the **Grid System** or a **User System**.
Load Following Capability	The capability of a **Generating Unit** to increase or decrease its output in a proportional manner to the increase in **Grid System Demand** in real time via **Automatic Generation Control (AGC)** and any other methods as specified in the Connection Code.
Local Safety Instructions	Instructions on each **User Site** and **TNB Transmission Site**, approved by Manager of the relevant **User** or **TNB Transmission**, setting down the methods of achieving the objectives of **User's** or **TNB Transmission's Safety Rules**, as the case may be, to ensure the safety of personnel carrying out work or testing on **Plant** and/or **Apparatus** on which his **Safety Rules** apply and, in the case of a **User**, any other document(s) on a **User Site** which contains rules with regard to maintaining or securing the isolating position of an **Isolating Device**, or maintaining a physical separation or maintaining or securing the position of an **Earthing Device**.
Location	Any place at which **Safety Precautions** are to be applied.
Locked	A condition of **HV Apparatus** that cannot be altered without operation of a locking device.
Long Term Flicker Severity	See **Flicker Severity (Long Term).**
Loss of Excitation Protection	A term referring to the protection system installed for detecting the loss of excitation supply to a **Generating Unit** and disconnecting the **Generating Unit** from the **Grid System** or a **User System** upon detection of such a condition.
Loss of Load Probability (LOLP)	A reliability index that indicates the probability that some portion of the peak demand will not be satisfied by the available generating capacity as per **License**

Term	Definition
	Standard. It may also be expressed as an expected duration in a year for which the peak demand is not being met, in which case it is referred as Loss of Load Expectation (LOLE).
Low Frequency Relay	Has the same meaning as **Under Frequency Relay**.
Main Meter	The main constituent part present in each **Metering Installation**, which provides **Metering Data** for **Settlement** purposes.
Main Metering Installation	The installation containing the **Main Meter**.
Main Protection or Main Protection System(s)	**Protection** equipment or system expected to have priority in initiating either a fault clearance or an action to terminate an abnormal condition in a power system.
Main Range	The mountain range spanning the Peninsular Malaysia.
Main Protection	**Protection** equipment or system expected to have priority in initiating either a fault clearance or an action to terminate an abnormal condition in a **Power System**.
Main Revenue Metering	The **Metering Installation** comprising the **Main Meter** forming the primary source of data for **Billing** purposes.
Major Generator	Any **Generator** with a total output capacity above 1000MW.
Malaysian Grid Code	See **Grid Code.**
Malaysian Grid Code Committee	See **Grid Code Committee.**
Malaysian Specification	A commonly used Malaysian technical specification or a technical approval.
Malaysian Standard Time	The reference time standard for **Malaysia**.

Term	Definition
Managers	A general term usually meaning **Managers** who have been duly authorised to sign **Site Responsibility Schedules** on behalf of the **User**.
Maximum Generation or Max Gen	The additional output obtainable from **Generating Plant** and **Interconnector Transfers** in excess of **Declared Availability**.
Meter	A device for measuring and recording produced or consumed units of **Active Energy** and **Reactive Energy** and/or **Active Power** and/or **Reactive Power** and/or **Demand**.
Metering	The process of measuring and recording the production or consumption of electrical energy.
Metering Code (MC)	That **Part** of the **Grid Code** which is identified as the **Metering Code (MC)**.
Metering Data	The data obtained from a **Metering Installation**, and/or processed data or substituted data that is used for **Settlement** purposes.
Metering Database	A database that contains the **Metering Register** and the **Metering Data**.
Metering Installation	A **Meter** and the associated current transformers, voltage transformers, metering protection equipment including alarms, LV electrical circuitry and associated data collectors, related to the measurement of **Active Energy** and/or **Reactive Energy** and/or **Active Power** and/or **Reactive Power,** as the case may be.
Metering Installation Outage	The unavailability of a **Metering Installation** due to breakdown or testing or maintenance.
Metering Point	The physical point at which electricity is metered.
Metering Register	A register of information associated with a **Metering Installation**. This includes type and **Technical Specifications** of equipment, audit and calibration data, site specific data, etc.

Term	Definition
Minimum Generation, Minimum Load or Minimum Stable Generation	The minimum output of a **Generating Plant** under which it can stably operate.
Minimum Stable Generation or Minimum Load	The minimum output of a **Generating Plant** under which it can stably operate.
Minor Generator	Any **Generator** with Power **Station** of a total output capacity below 30 MW.
Minor Generating Plant	A **Generator Plant** owned by a **Generator** with an output of less than 30 MW.
Modification	Any actual or proposed replacement, renovation, modification, alteration or construction by or on behalf of a **User** to that **User's Plant** or **Apparatus** or the manner of its operation which has or may have a material effect on **Transmission System** or a **User System**, as the case may be, at a particular **Connection Site**.
Multiple Point of Connection	Two (or more) **Points of Connection** interconnected to each other through the **Grid System**.
National Load Dispatch Centre (NLDC)	The **Control Centre** from which the **GSO** directs the control of the Peninsular Malaysia Power System.
Network	A general expression for a **Transmission**, **Distribution**, **User** or a **Network Operator's System**.
Network Data	The data to be provided by the **Grid Owner** and **GSO** to **Users** or by the **Users** to the **Grid Owner** and **GSO** as the case may be.
Network Operator(s)	A person with a **User System** directly connected to the **Transmission System** to which **Customers** and/or

Term	Definition
	Power Stations (not forming part of the **Grid System**) are connected, acting in its capacity as an operator of the **User System**, but shall not include a person acting in the capacity of an **Externally Interconnected Party**.
Network Operator's System	Any system owned or operated by a **Network Operator** comprising:- (i) **Generating Units;** and/or (ii) systems consisting (wholly or mainly) of electric lines used for the **Distribution** of electricity from **Grid Supply Points** or **Generating Units** or other entry points to the point of delivery to **Customers**, or other **Users**; (iii) Plant and/or Apparatus connecting the system as described above to the **Transmission System** or to the relevant other **User System**, as the case may be.
No-Load Field Voltage	Shall have the meaning ascribed to that term in **IEC** 34-16-1:1991.
Nominated Fuel	See **Primary Fuel**.
Non-Spinning Reserve	The Reserve that is not spinning but available to start within its starting parameters.
Non-Working Day(s)	Any day which is not a **Working Day**.
Normal CCGT Module	A **CCGT Module** other than a **Range CCGT Module**.
Normal Operating Condition	The operating condition of the **Grid System** when the voltage and frequency at all points on the system are within their normal limits and the system is secure against outages within **Transmission System Reliability Standards**.
Notice to Synchronise	The period of time normally required to **Synchronise** a **Dispatch Unit** following instruction from the GSO as stipulated in relevant **Agreement**.
Novel Units	A tidal, wave, wind, geothermal, biomass or any similar, **Generating Unit**.

Term	Definition
Numbering and Nomenclature (OC9)	That **Part** of the **Operational Codes** of this **Grid Code** which is identified as the **Numbering and Nomenclature (OC9)**.
On-Line Fuel Changeover	The fuel changeover functional requirements of a dual fuel or main and standby fuel **Power Station** or **Generating Plant** specified by the **GSO and Single Buyer**.
Operational Codes (OCs) or Operating Codes	That **Part** of the **Grid Code** which is identified as the **Operational Codes (MC)**.
Operating Code No 1 - Demand Forecast (OC1)	The **Operating Code No 1** of this **Grid Code** dealing with **Demand Forecasting**.
Operating Code No 2 - Outage and Other Related Planning (OC2)	The **Operating Code No 2** of this **Grid Code** dealing with operational planning and outage coordination matters.
Operating Code No 3 - Operating Reserves and Response (OC3)	The **Operating Code No 3** of this **Grid Code** dealing with operating reserve and its response for dealing with generation contingencies in operational timescales.
Operating Code No 4 - Demand Control (OC4)	The **Operating Code No 4** of this **Grid Code** dealing with the various forms of **Demand Control** methods available to the **GSO** in operating the system and their implementation.
Operating Code No 5 - Operational Liaison (OC5)	The **Operating Code No 5** of this **Grid Code** dealing with the procedures for communication and liaison between the **GSO** and the **Users** and their implementation.
Operating Code No 6 – Significant Incident	The **Operating Code No 6** of this **Grid Code** dealing with the reporting of scheduled and planned actions and

Term	Definition
Reporting (OC6)	significant unscheduled occurrences such as faults and investigation of the impact of such occurrences.
Operating Code No 7 – Emergency Operations (OC7)	The **Operating Code No 7** of this **Grid Code** dealing with the actions to be taken by the **GSO** in preparing operational strategies towards maintaining the integrity of the system under severe system contingencies beyond the security criteria, and implementation of those strategies.
Operating Code No 8 - Safety Coordination (OC8)	The **Operating Code No 8** of this **Grid Code** dealing with the co-ordination between **GSO** and **User**, in the establishment and maintenance of **Isolation** and **Earthing** in order that work and/or testing can be carried out safely at **Connection Point(s).**
Operating Code No 9 - Numbering and Nomenclature (OC9)	The **Operating Code No 9** of this **Grid Code** dealing with the procedures for numbering and nomenclature of **HV Apparatus** at certain sites where new construction is to be integrated or changes are to be made to existing **Connection Point(s)**.
Operating Code No 10 - Testing and Monitoring (OC10)	The **Operating Code No 10** of this **Grid Code** dealing with the procedures for testing and monitoring of the effects of a **User's System** on the **Transmission System** and vice versa.
Operating Code No 11 - System Tests (OC11)	The **Operating Code No 11** of this **Grid Code** dealing with the procedures for the establishment of system tests where commissioning and testing of equipment and its capability may require application of unusual or irregular operating conditions.
Operating Reserve(s)	The additional output from **Generating Plant** or the reduction in **Demand**, which must be realisable in real-time operation to respond in order to contribute to containing and correcting any **System Frequency** fall to an acceptable level in the event of a loss of generation or a loss of import from an **External Interconnection** or mismatch between generation and **Demand**.
Operation Diagram	Diagrams which are a schematic representation of the **HV Apparatus** and the connections to all external

Term	Definition
	circuits at a **Connection Site**, incorporating its numbering, nomenclature and labelling.
Operation Code (OC) or Operating Code	That **Part** of the **Grid Code** identified as the **Operation Code(s)** or **Operating Code(s)**.
Operation Diagrams	Diagrams which are a schematic representation of the **HV Apparatus** and the connections to all external circuits at a **Connection Site**, incorporating its numbering, nomenclature and labelling.
Operational Control	The real time control of the operation of the **Grid System** by the **GSO**.
Operational Effect	Any effect on the operation of the relevant **System** which will or may cause the **Grid System** or other **User Systems** to operate (or be at a materially increased risk of operating) differently to the way in which they would or may have normally operated in the absence of that effect.
Operational Intertripping	The automatic tripping of circuit-breakers to prevent abnormal system conditions occurring, such as over voltage, overload, **System** instability, etc. after the tripping of other circuit-breakers following power **System** disturbance(s) which includes **System** to **Generating Unit**, **System** to **CCGT Module** or **System** to **Demand Intertripping** schemes or by **Special Protection** schemes.
Operational Plan	The **Plan(s)** prepared by the **GSO** for the operation of the system in the **Operational Planning** timescales.
Operational Planning	Planning through various timescales the matching of generation output with forecast **Demand** together with a reserve of generation to provide a margin, taking into account outages of certain **Generating Units**, of parts of the **Grid System** and of parts of **User Systems** to which **Power Stations** and/or **Customers** are connected, carried out to achieve, so far as possible, the License Standards.

Term	Definition
Operational Planning Phase	Operational Planning Phase covers several time frames of operation from 5-year ahead to the start of the Control Operational Phase.
Operational Procedures	Procedures followed during real time operation of the **Grid System** included in that **Part** of the **Grid Code** which is identified as the **Operational Codes (OC)**.
Operational Metering	**Operational Metering** comprises **Metering Installations** installed to measure voltage, current, frequency, **Active** and **Reactive Power**, and accept signals relating to plant status indications and alarms monitoring the circuits connecting the **User Plant** and **Apparatus** to the **Transmission System** for operational purposes.
Operational Metering Data	The data from **Operational Metering** collected by the **Remote Terminal Units** and used by the **GSO** in directing the coordinated operation of the **Grid System**.
Orange Warning	A **System Warning** issued by the **GSO** related to the system operating conditions when there may be a **High Risk of Demand Reduction**.
Output Usable	That portion of **Registered Capacity** which is not unavailable due to a **Planned Outage** or breakdown.
Over-excitation Limiter	Shall have the meaning ascribed to that term in **IEC** 34-16-1:1991.
Part Load	The condition of a **Dispatch Unit** which is **Loaded** but is not running at its full **Availability**.
Partial Blackout	A **Grid System** operational condition where after a disturbance all **Generation** has ceased in a part of the **Grid System** and there is no electricity supply from **External Interconnections** or other parts of the **Grid System** to that part of the **Grid System**, with the result that it is not possible for that part of the **Grid System** to begin to function again without the **Grid System Operator**'s directions, including provisions relating to a **Black Start**.

Term	Definition
Partial Check Metering	**Check Metering** applied to Type 2 connections, with less than 7.5MW load or less than 60GWh energy consumption, in agreement between the **Single Buyer** and the **User**.
Parts (of the Grid Code)	Individual self contained chapters or sections of the **Grid Code** addressing specific subject areas.
Passive Circuits	Those transmission circuits that do not have generation connected and which connect the Transmission System to Grid Supply Points and/or Consumer Demand.
Peak Demand Conditions	The **Grid** or **Total System** conditions pertaining to the peak **System Demand**.
Peninsular Malaysia Maximum Demand	The peak MW demand of the day for the year for the total Peninsular Malaysian Grid System.
Peninsular Malaysia Minimum Demand	The minimum MW demand of the day for the year for the total Peninsular Malaysian Grid System.
Phase Unbalance	A general term relating to the difference in the magnitude of the three individual phase voltages due to the imbalance in the magnitude of the **Demand (Load)** connected to each one (1) of the three (3) phases.
Planned Outage	An outage of **Generating Plant** or of part of the **Transmission System**, or of part of a **User System**, co-coordinated by **GSO** under **OC2**.
Planning Data	The data associated with the longer term **Planning** of the **Transmission System** and for calculation of **Generation Adequacy** to meet the **Forecast Demand**.
Planning Code (**PC**)	That **Part** of the **Grid Code** which is identified as the **Planning Code (PC)**.
Plant	Fixed and movable items used in the generation and/or supply and/or transmission of electricity, other than **Equipment**.
Point of Common	That point on the **Transmission System** which is

Term	Definition
Coupling	electrically closest to the **User** installation at which either **Demands (Loads)** are, or may be, connected.
Point of Connection	An electrical point of connection between the **Transmission System** and a **User's System**.
Pole-Slipping Protection	A term referring to the protection system installed for detecting a specific **Generating Unit** operational condition termed "pole slipping" and disconnecting the **Generating Unit** from the **Grid System** or a **User System** upon detection of such a condition. This disconnection being implemented to prevent a **Total System Blackout** due to the high risk of consequential adverse cascade tripping of transmission circuits by their protection at times when such **Generating Unit** operation is permitted to persist.
Power Electronic Devices	A general term used for describing **Plant** for installation on the **Transmission System** which utilise various types of power electronic devices.
Power Factor	The ratio of **Active Power** to **Apparent Power**.
Power Island	**Dispatch Units** at an isolated **Power Station**, together with its local **Demand**.
Power Purchase Agreements (PPAs)	**Agreements** between the **Single Buyer** and a **Generators** or **Network Operators** relating to the financial and technical conditions relating to the purchase of the **Power Station** output and technical conditions relating to its connection to and performance on the **Grid System**.
Power Station	An installation comprising one or more **Generating Units** (even where sited separately) owned and/or controlled by the same **Generator**, which may reasonably be considered as being managed as one **Power Station**.
Power Station Auxiliaries	The auxiliary **Plant** enabling normal functioning of a **Power Station**.

Term	Definition
Power System	The whole of the **Transmission Network** and connected **Distribution Networks** and **User Networks** and the **Generating Plants** connected to those **Networks.**
Power System Stabiliser (PSS)	Equipment controlling the **Exciter** output via the voltage regulator in such a way that power oscillations of the synchronous machines **(Generating Units)** are dampened. Input variables may be speed, frequency or power or a combination of these system quantities.
Pre-test Report	The report submitted by a **Test Coordinator** upon the approval of the **GSO**, containing the proposals for carrying out the **System Test** including the manner in which it is to be monitored.
Preliminary Project Data	Data relating to a proposed **User Development** at the time the **User** applies to the **Grid Owner** for connection to the **Transmission System**.
Primary Fuel	The main fuel of a **Power Station** or **Generating Plant** nominated by the **Grid Owner** based upon the calculations made in preparing the **Generation Development Plan**. Also termed as **Nominated Fuel**.
Primary Response	The automatic response to **Frequency** changes released increasingly with time over the period 0 to 10 seconds from the time of **Frequency** change and fully available by the latter, and which is sustainable for at least a further twenty (20) seconds by **Generating Units,** dispatched by the **GSO** to provide such a response.
Programming Phase	The period between **Operational Planning Phase** and the **Control Phase**. It starts at the eight (8) weeks ahead stage and ends with the issue of the **Generation Schedule** for the day ahead.
Protection	The provisions for detecting abnormal conditions on a **System** and initiating fault clearance or actuating signals or indications.
Protection Apparatus	A group of one or more **Protection** relays and/or logic elements designated to perform a specified **Protection**

Term	Definition
	function.
Protection of Interconnecting Connections	The requirements for the provision of **Protection** equipment for interconnecting connections specified by the **Single Buyer** in consultation with the **Grid Owner** and the **GSO**. The term "interconnecting connections" means the primary conductors from the current transformer accommodation on the circuit side of the circuit breaker to the **Connection Point**.
Prudent Industry Practice or Prudent Utility Practice	The exercise of that degree of skill, diligence, prudence and foresight which would reasonably and ordinarily be expected from a skilled and experienced operator engaged in the same type of undertaking under the same or similar circumstances.
Pumped Storage Generator	A **Generator** which owns and/or operates any **Pumped Storage Plant.**
Range CCGT Module	A **CCGT Module** where there is a physical connection by way of a steam or hot gas main between that **CCGT Module** and another **CCGT Module** or other **CCGT Modules**, which connection contributes (if open) to efficient modular operation, and which physical connection can be varied by the operator.
Rated Field Voltage	Shall have the meaning ascribed to that term in **IEC** 34-16-1:1991.
Rated MVA	The "rating-plate" MVA output of a **Generating Unit,** being that output up to which the **Generating Unit** was designed to operate (Calculated as specified in **British Standard BS** EN 60034 – 1: 1995).
Rated MW	The "rating-plate" MW output of a **Generating Unit,** being that output up to which the **Generating Unit** was designed to operate (Calculated as specified in **British Standard BS** EN 60034 – 1: 1995).
Reactive Compensation	Any shunt-connected equipment connected to the **Transmission System** or a **User System** which is

Term	Definition
Equipment	switched and/or controlled such that it generates or absorbs reactive power to the **Transmission System** at the busbar at which it is connected so as to enable the **GSO** to control and stabilise the system voltage at that busbar.
Reactive Energy	The electrical energy produced, flowing or supplied by an electric circuit during a time interval, being the integral with respect to time of the instantaneous reactive power, measured in units of var-hours or standard multiples thereof, i.e.: 1000 VArh = 1 kVArh 1000 kVArh = 1 MVArh 1000 MVArh = 1 GVArh 1000 GVArh = 1 TVArh
Reactive Power	The product of voltage and current and the sine of the phase angle between them measured in units of voltamperes reactive and standard multiples thereof, i.e.: 1000 VAr = 1 kVAr 1000 kVAr = 1 MVAr
Red Warning	A **System Warning** issued by the **GSO** related to the system operating conditions when there may be an **Extremely High Risk of Demand Reduction or Demand Control Imminent**.
Registered Capacity	In the case of a **Generating Unit** other than that forming part of a **CCGT Module**, the normal full load capacity of a **Generating Unit** as declared by the **Generator**, less the MW consumed by the **Generating Unit** through the **Generating Unit's** unit transformer when producing the same (the resultant figure being expressed in whole MW.) In the case of a **CCGT Module**, the normal full load capacity of a **CCGT Module** as declared by the **Generator**, being the **Active Power** declared by the **Generator** as being deliverable by the **CCGT Module** at the **Grid Entry Point** (or in the case of an **Embedded CCGT Module**, at the **User System Entry Point**), expressed in whole MW.

Term	Definition
Registered Data	Those items of **Standard Planning Data** and **Detailed Planning Data** which upon connection become fixed (subject to any subsequent changes).
Regulations	A general term usually meaning Electricity Supply Regulations, 1994 or other relevant applicable regulations in Malaysia.
Remote Terminal Unit (RTUs)	A unit installed at a **Connection Point** or **Metering Point** which communicates all the **Operational Metering** Data and the **Revenue Metering Data** to a central data collection system for the operational use of the **GSO**.
Relay Setting	The values of parameters defining the appropriate operation of a **Protective Relay** within a **Protection** system.
Responsible Manager	**Managers** who have been duly authorised to sign **Site Responsibility Schedules** on behalf of the **User**.
Responsible Person	A person nominated by a **User** to be responsible for control and operation of their associated **Plant** and **Apparatus**.
Revenue Metering	A **Metering Installation** at a **Connection Point** or a **Generator Circuit**, for fiscal accounting, contractual and/or statistical purposes.
Revenue Metering Data	The data recorded and stored in the **Revenue Metering Installations**.
Revenue Metering Installation	A **Metering Installation** dedicated to providing data for **Billing** purposes.
Risk of System Disturbance	A **System Warning** issued by the **GSO** to **Users** who maybe affected when the **GSO** knows there is a risk of widespread and serious disturbance to the whole or part of, the **Transmission System**.
RISP	An acronym for a Record of Inter-system Safety Precautions as in **OC8**.

Term	Definition
Safety Coordination (OC8)	That **Part** of the **Operational Codes** of this **Grid Code** which is identified as the **Safety Co-ordination (OC8)**.
Safety Coordinators	A person or persons nominated by the **Grid Owner** and each **User** to be responsible for the co-ordination of **Safety Precautions** at each **Connection Point** when work (which includes testing) is to be carried out on a **HV Apparatus** which necessitates the provision of **Safety Precautions** from another **System**.
Safety Key	A key used to lock and unlock the switching operation of an isolating device for the implementation safety precaution in OC8.
Safety Logs	A chronological record of messages relating to safety co-ordination sent and received by each **Safety Coordinator** under **OC8**.
Safety Precautions	The Isolation and/or **Earthing** of **HV Apparatus**.
Safety Rules	The rules of **TNB Transmission** or a **User** that seek to ensure that persons working on **Plant** and/or **Apparatus** to which the rules apply are safeguarded from hazards arising from the **System**.
SCADA	An acronym for Supervisory Control and Data Acquisition, the real time computer system that is used to monitor and control the **Power System** in real time.
Schedule Day	As defined in **SDC1** the period from 00:00 to 24:00 hours in each day.
Scheduling	The process of compiling and issuing a **Generation Schedule**, as set out in **SDC1**. The process which identifies the amount and types of generating sources which may be required to meet the forecast demand in any particular time interval in the next **Schedule Period** with the appropriate level of security whilst maintaining the integrity of the **Grid System**.
Scheduling and	That **Part** of the **Grid Code** which specifies the

Term	Definition
Dispatch Codes (SDCs)	**Scheduling and Dispatch** process.
Scheduling and Dispatch Code No 1 - Generation Scheduling (SDC1)	The **Scheduling and Dispatch Code No 1** of this **Grid Code** dealing with the procedures based upon the prices quoted in **Power Purchase Agreements (PPAs)** and certain other technical performance and outage information, the preparation of an indicative **Least Cost Generation Schedule** indicating which **Generating Units** may be instructed or **Dispatched** the following day.
Scheduling and Dispatch Code No 2 - Control, Real-Time Re-Scheduling and Dispatch (SDC2)	The **Scheduling and Dispatch Code No 2** of this **Grid Code** dealing with the issue of **Control**, **Real-Time Re-Scheduling** and **Dispatch** instructions to **Generating Units**, and the receipt and issue of certain other associated information.
Scheduling and Dispatch Code No 3 - System Frequency and Interconnector Transfer Control (SDC3)	The **Scheduling and Dispatch Code No 3** of this **Grid Code** dealing with the procedures and requirements in relation to control of system **Frequency** and interconnector power transfers.
SDP Notice or Scheduling and Dispatch Parameter Notice	A notice given by a **Generator** to the **GSO and Single Buyer** detailing changes to the **Scheduling and Dispatch Parameters** of any of its **Generating Units** in respect of the following **Schedule Day**.
Secondary Response	The automatic response to **Frequency** which is fully available by thirty (30) seconds from the time of **Frequency** change to take over from the **Primary Response**, and which is sustainable for at least thirty (30) minutes from **Generating Units,** dispatched by the **GSO** to provide such a response.
Secretary	Secretary of the **Malaysian Grid Code Committee**.
Settlement	Those processes and procedures for the calculation of payments which become due under relevant **Agreements**.

Term	Definition
Short Term Flicker Severity	See **Flicker Severity (Short Term)**.
Short Duration Outage	Outages which are up to two (2) days in duration.
Shutdown	The condition of a **Generating Unit** where the generator rotor is at rest or on barring.
Significant Incident	An **Event** which the **GSO** or a **User** considers has had or may have had a significant effect upon the **Grid System**.
Simultaneous Tap Change	A tap change implemented on the generator step-up transformers of **Synchronised Dispatch Units** (or **CCGT Units**, as the case may be), effected by **Generators** in response to an instruction from the **GSO** issued simultaneously to the relevant **Power Stations.** The instruction, preceded by advance notice, must be effected as soon as possible and in any event within one (1) minute of receipt of the instruction from the **GSO**.
Single Buyer	The part of the **TNB** responsible for managing P**ower Purchase Agreements** and **Settlement** process.
Single Line Diagram	A schematic representation of a three-phase network in which the three phases are represented by single lines. The diagram shall include (but not necessarily be limited to) busbars, overhead lines, underground cables, power transformers, and reactive compensation equipment. It shall also show where **Generating Plant** is connected, and the points at which **Demand** is supplied.
Single Point of Connection	A single **Point of Connection**, with no interconnection through the **User's System** to another **Point of Connection**.
Site	A physical location which accommodates all the **Plant**, **Apparatus** and **Equipment** related to a connection(s) to the **Transmission System**.
Site Common	Drawings prepared for each **Connection Site** which

Term	Definition
Drawings	incorporates **Connection Site** layout drawings, electrical layout drawings, common protection/ control drawings and common services drawings.
Site Responsibility Schedule	A schedule containing the information and prepared on the basis of the provisions set out in Appendix 1 of the **Connection Code**.
Small Generating Plant	A **Generating Unit** owned by a **Generator** with an output of 30MW to 50 MW.
Special Protection Arrangement	The arrangement pertaining to the special protection devices and their settings and their sequence of operation.
Special Protection Measures	Protection measures other than the normal protection measures specified in this **Grid Code** that may be required by the **GSO** and **Grid Owner** to ensure safe, secure and stable operation of the **Grid System**. Some of these measures may be temporary or interim subject to completion of certain system developments while others may be permanent due to specific parameters of **Plant** connected to the **Grid System**.
Spinning Reserve	The level of output in a whole number of MW at which a **Generating Unit** should operate to give the maximum capability to contribute to **Operating Reserve**.
Spinning Reserve Level	The minimum level of output in a whole number of MW at which a **Dispatch Unit** or **Interconnector Transfer** should operate to be capable of attaining **Registered Capacity** within five (5) minutes**.**
Spinning Response	The dynamic MW output response available from **Generating Unit** already synchronised to and operating on the **Grid System**.
Stability Limits	The limits within which a **Generating Unit** can be stably operated either in terms of its rotor angle returning to a steady-state position after a **Grid System** disturbance or in terms of the minimum load at which its prime mover can stably operate.

Term	Definition
Standards	A general term describing **Standards** that may apply to **Reliability of Supply**, **Security of Supply** or **Quality of Supply** or **Plant** or **Apparatus** or **Equipment** or specific procedures.
Standard Planning Data	The general data required by the **Grid Owner** under the **PC**. It is generally also the data which the **Grid Owner** requires from a new **User** in a connection application and from an existing **User** in an application for a new or varied connection, as reflected in the **PC**.
Stand-by Fuel	The fuel defined by the **Single Buyer** as the stand-by fuel as part of the relevant **Agreement**.
Stand-by Fuel Stock	The stock level for the **Stand-by Fuel** defined by the **Single Buyer** as part of the relevant **Agreement**.
Start-up	The action of bringing a **Generating Unit** from **Shutdown** to **Synchronous Speed**.
STATCOM	A static synchronous generator operated without an external electric energy source as a shunt-connected static var compensator whose capacitive or inductive output current can be controlled independently of the AC system voltage. The STATCOM may include a transiently rated energy storage or energy absorbing device to enhance the dynamic behaviour of the power system by additional temporary real power compensation.
Static Var Compensator (**SVC**)	A shunt-connected static var generator/absorber whose output is adjusted to exchange capacitive or inductive current so as to maintain or control specific parameters of the electrical power system (typically busbar voltage).
Station Board	A switchboard through which electrical power is supplied to the **Auxiliaries** of a **Power Station**, and which is supplied by a **Station Transformer**. It may be interconnected with a **Unit Board.**
Station Transformer(s)	A transformer supplying electrical power to the **Auxiliaries** of a **Power Station**, which is not directly

Term	Definition
	connected to the **Generating Unit** terminals (typical voltage ratios being 132/11kV, 275/11kV or 500/22kV).
Steam Unit	A **Generating Unit** whose prime mover converts the heat-energy in steam to mechanical energy.
Subtransmission System	The part of a **User's System** which operates at a single transformation level below a 500kV and 275kV and 132kV.
Supplementary Services	Services such as **Black Start**, MW Response and **Reserve** for **Frequency** control, **AGC, Reactive Power**, **Reactive Energy**, **Stand-by Re**serve and **Demand Control**.
Switching Operation Record	A written document maintained by the **GSO** and each **User** of all switching operation carried out in the **Grid System** and the **User System** respectively.
Synchronisation	The process of bringing a **Generating Unit** to synchronous speed (frequency) and rated output voltage and closing the generator circuit breaker when the **System** and generator are at the same frequency and the generator and system voltages remain within a specific phase angle separation.
Synchronised	The condition where an incoming **Generating Unit** or **System** is connected to the busbars of another **System** so that the **Frequencies** and phase relationships of that **Generating Unit** or **System**, as the case may be, and the **System** to which it is connected are identical.
Synchronised CDGUs	The **Centrally Dispatched Generating Units** which are synchronised to the **Grid System**.
Synchronising	The condition where an incoming **Generating Unit** or **System** is connected to the busbars of another **System** so that the **Frequencies** and phase relationships of that **Generating Unit** or **System**, as the case may be, and the **System** to which it is connected are identical, like terms

Term	Definition
	shall be construed accordingly.
Synchronising Generation	The amount of MW (in whole MW) produced at the moment of synchronising.
Synchronising Group	A group of two or more **Dispatch Units** at a **Power Station**.
Synchronous Speed	That speed required by a **Generating Unit** to enable it to be **Synchronised** to a **System**.
System(s)	Any **User System** and/or the **Transmission System**, as the case may be.
System Constraint	Limit on the operation of the Transmission System due thermal rating, stability consideration, voltage consideration and other limits.
System Constrained Capacity	That portion of **Registered Capacity** not available due to a **System Constraint**.
System Constraint Group or **Groups**	A part of the **Transmission System** which, because of **System Constraints,** is subject to limits of **Active Power** which can flow into or out of that part.
System Development Statement	A statement, prepared by the **Grid Owner** showing for each of the ten (10) succeeding years, the opportunities available for connecting to and using the **Transmission System** and indicating those parts of the **Transmission System** most suited to new connections and transport of further quantities of electricity.
System Fault Dependability Index	A measure of the ability of **Protection** to initiate successful tripping of circuit-breakers which are associated with a faulty item of **Apparatus**. It is calculated using the formula: **Dp** = 1 - F_1/A where: A = Total number of **System** faults F_1 = Number of System faults where there was a failure to trip a circuit-breaker.

Term	Definition
System Frequency	Has the same meaning as **Frequency**.
System Frequency and Interconnector Transfer Control (SDC3)	That **Part** of the **Scheduling and Dispatch Code** of this **Grid Code** which is identified as the **System Frequency and Interconnector Transfer Control (SDC3)**.
System Stress	The condition of the **Grid System** when the **GSO** reasonably considers that a single credible incident would most probably result in the occurrence of **Power Islands** or **Partial Blackout** or **Total Blackout**.
System Tests (OC11)	That **Part** of the **Operational Codes** of this **Grid Code** which is identified as the **System Tests (OC11)**.
System Voltage	Has the same meaning as **Voltage**.
System Warning	A warning issued by the **GSO** to certain **Users** to alert the **Users** to possible or actual **Plant** shortage, **System Problems** and/or **Demand Reductions**.
Target Frequency	That **Frequency** determined by the **GSO**, in its reasonable opinion, as the desired operating **Frequency** of the **Total System**. This will normally be 50.00Hz plus or minus 0.1Hz, except in exceptional circumstances as determined by the **GSO**, in its reasonable opinion when this may be 49.50 or 50.50Hz. An example of exceptional circumstances may be difficulties caused in operating the **System** during periods of fuel supply problems.
Technical Specification	In relation to **Plant** and **Apparatus** the relevant Malaysian, **International Technical Specification**.
Test Coordinator	A person who co-ordinates **System Tests**.
Test Committee	A committee, whose composition is detailed in **OC11**, which is responsible, inter alia, for considering a proposed **System Test**, and submitting a **Proposal Report** and a **Test Programme**.
Test Programme	A programme submitted by the **Test Committee** to the

Term	Definition
	Grid Owner, **GSO**, the **Test Proposer**, and each **User** identified by the **GSO** under **OC11**, which states the switching sequence and proposed timings of the switching sequence, a list of those staff involved in carrying out the **System Test** (including those responsible for the site safety) and such other matters as the **Test Committee** deems appropriate.
Test Proposal Notice	The notice submitted to by the **Test Proposer** to the **GSO**.
Test Proposer	The person who submits a **Proposal Notice**.
Testing and Monitoring (OC10)	That **Part** of the **Operational Codes** of this **Grid Code** which is identified as the **Testing and Monitoring (OC10)**.
Thermal Unit	**Generating Units** where the prime movers and/or driving turbines are driven by steam or combustion of various fossil fuels.
Tenaga Nasional Berhad (TNB)	The registered incorporated company comprising of Generation, Transmission and Distribution.
TNB Distribution	The **Distribution Division** of **TNB**.
TNB Site or TNB Transmission Site	Means a site owned (or occupied pursuant to a lease, licence or other agreement) by **TNB** in which there is a **Connection Point**. For the avoidance of doubt, a site owned by a **User** but occupied by **TNB** as aforesaid, is a **TNB Site**.
TNB Transmission Division	The **Transmission Division** of TNB
TNB Transmission	Part of the **Transmission Division of TNB** engaged in Transmission Asset Development, Operation and Maintenance activities**. TNB Transmission** represents the Grid Owner.
Total Blackout	The situation existing when all generation has ceased and there is no electricity supply from **External**

Term	Definition
	Interconnections and, therefore, the **Total System** has shutdown with the result that it is not possible for the **Total System** to begin to function again without **GSO's** directions relating to a **Black Start**.
Total Harmonic Distortion	Harmonic distortion is the departure of a waveform from sinusoidal shape that is caused by the addition of one or more harmonics to the fundamental. Total Harmonic Distortion is the square root of the sum of the squares of all harmonics expressed as a percentage of the magnitude of the fundamental.
Total System	The **Grid System** and all **User Systems** in Peninsular Malaysia.
Transmission Capacity	The ability of a network or a connection to transmit electricity.
Transmission Constraints	The constraints such as limitation of power flow due to **Transmission** circuit outages or reduced reactive power output from or outages of **Generators** or **Reactive Compensation Equipment** or inadequate ratings of **Transmission Plant** under certain operational conditions.
Transmission Development Plan	An annual statement prepared by the **Grid Owner** for submission to the **EC** identifying the **Transmission System** developments required to ensure compliance with the **Licence Standards** in accordance with the procedures in the **Planning Code** and data received from **Users**.
Transmission Division	See **TNB Transmission Division.**
Transmission Network	The transmission lines, substations and other associated **Plant** and **Apparatus** operating at 66kV or above in Peninsular Malaysia.
Transmission Reliability Standard	The **License Standard** which relates to provision of sufficient **Transmission Capacity**, operational facilities, maintenance activity and co-ordination with **Generation**

Term	Definition
	and **Distribution Functions** to enable continued supply of electric energy to the **Distribution** systems and **Directly Connected Customers**. This **Standard** is used by the **Grid Owner** to determine the investment requirements for the **Transmission System** and **GSO** operational facilities and implement the necessary measures.
Transmission System	The system consisting (wholly or mainly) of high voltage electric lines (66kV and above) owned or operated by **TNB Transmission** and used for the transmission of electricity from one **Power Station** to a sub-station or to another **Power Station** or between sub-stations or to or from any **External Interconnection**, and includes any **Plant** and **Apparatus** and meters owned or operated by **TNB Transmission** in connection with the transmission of electricity .
Transmission System Power Quality Standards	The **License Standards** specifying the **Power Quality** requirements of the bulk supply to be delivered to the **Distribution System**, at the bulk **Demand Connection Points** where any **Distribution System** or **User System** is connected to the **Transmission System** in terms of stable **Voltage** and **Frequency** within specific limits so that **Generator's** or **User's** equipment directly connected to the **Transmission System** can operate safely within its design performance without suffering undue damage or breakdown.
Transmission System Reliability Standards	The Reliability Standards comprising the: (a) the **Generation Reliability Standard**; and (b) the **Transmission Reliability Standard**
Two Shifting Limit	The maximum number of times in any **Schedule Day** that a **CDGU** may **De-Synchronise** (which, for the purpose of this definition, is deemed to occur at the **De-Synchronising** time included in (or which can be calculated from) the **Dispatch** instruction.
Unconstrained Schedule	The **Generation Schedule** which result in least operating cost without taking **Transmission System**

Term	Definition
	constraints and outages into account.
Under-excitation Limiter	Shall have the meaning ascribed to that term in **IEC** 34-16-1:1991.
Under Frequency Relays	An electrical measuring relay intended to operate when its characteristic quantity the "**Frequency**" reaches the relay settings by a decrease in **System Frequency**.
Unit Board(s)	A switchboard through which electrical power is supplied to the **Auxiliaries** of a **Generating Unit** and which is supplied by a **Unit Transformer.** It may be interconnected with a **Station Board**.
Unit Transformer(s)	A transformer directly connected to a **Generating Unit's** terminals, and which supplies power to the **Auxiliaries** of a **Generating Unit**. Typical voltage ratios are 23/11kV and 15/6.6kV.
Unplanned Outage	An outage of **Generating Plant** or of part of the **Transmission System**, or of part of a **User System**, that has not been planned under **OC2**.
User or Users	A term utilised in various sections of the **Grid Code** to refer to the persons using the **Transmission System**, as more particularly identified in each section of the **Grid Code** concerned. In the **Preface** and the **General Conditions** the term means any person to whom the **Grid Code** applies.
User Development	In the **PC** means either **User's Plant** and/or **Apparatus** to be connected to the **Transmission System**, or a **Modification** relating to a **User's Plant** and/or **Apparatus** already connected to the **Transmission System**, or a proposed new connection or **Modification** to the connection within the **User System**.
User('s) HV Apparatus	**HV Apparatus** owned by the **User**.
User's Metering Installation	A **Metering Installation** owned by a **User**.

Term	Definition
User Network (see User System)	Any system owned or operated by a **User** comprising:- (i) **Generating Units;** and/or (ii) systems consisting (wholly or mainly) of electric lines used for the distribution of electricity from **Grid Supply Points** or **Generating Units** or other entry points to the point of delivery to **Customers**, or other **Users**; and **Plant** and/or **Apparatus** connecting:- (i) the system as described above; or (ii) **Directly Connected Customers** equipment; to the **Transmission System** or to the relevant other **User System**, as the case may be.
User's Operation Diagram	The **Operation Diagram** prepared by the **User**.
User's Plant and/or **Apparatus**	**Plant** and/or **Apparatus** owned or operated by a **User.**
User's Responsible Engineer/Operator	A person nominated by a **User** to be responsible for **System** control.
User's Safety Rules	The **Safety Rules** prepared and implemented by a **User** at the **User Sites**.
User's Site	A site owned (or occupied pursuant to a lease, licence or other agreement) by a **User** in which there is a **Connection Point**. For the avoidance of doubt, a site owned by **TNB Transmission** but occupied by a **User** as aforesaid, is a **User Site**.
User's Site Common Drawings	The **Site Common Drawings** prepared by the **User**.
User's Subtransmission	The part of a **User's System** which operates at a single transformation level below a 500kV and 275kV and

Term	Definition
System	132kV.
User System or User's System or User's Network	Any system owned or operated by a **User** comprising:- (i) **Generating Units;** and/or (ii) systems consisting (wholly or mainly) of electric lines used for the distribution of electricity from **Grid Supply Points** or **Generating Units** or other entry points to the point of delivery to **Customers**, or other **Users**; and **Plant** and/or **Apparatus** connecting:- (iii) the system as described above; or (iv) **Non-Embedded Customers** equipment; to the **Transmission System** or to the relevant other **User System**, as the case may be.
User's Safety Rules	The rules of a **User** that seek to ensure that persons working on **Plant** and/or **Apparatus** to which the rules apply are safeguarded from hazards arising from the **User's System**.
VDCL (Voltage Dependent Current Limits)	The voltage dependent operating current limits set within the control system of the converter equipment of an **HVDC Interconnection** providing the appropriate overcurrent protection to the converter equipment.
Voltage	Electric potential or electro motive force (emf) expressed in volts.
Working Day	Same as **Business Day**.
Weekly Operational Plan	A statement issued by the **GSO** each week (to **Generators** as set out in **OC4**) of specific requirements to enable the **GSO** to operate the **Grid System** within the requirements of the **Licence Standards**.
Yellow Warning	A **System Warning** issued by the **GSO** related to the system operating conditions when there may be a

Term	Definition
	Probable Risk of Demand Reduction.

<End of Part I - Glossary and Definitions>

Part II: Introduction and Purpose

IP1 General

IP1.1 The Grid Code shall be complied with by the GSO, Grid Owner and all Users of the Grid System who are issued with Generation and/or Transmission (including Single Buyer) and/or Distribution Licenses by the Energy Commission, and directly connected consumers.

IP1.2 This Grid Code sets out the operating procedures and principles governing the relationship between the GSO, Grid Owner and all Users of the Grid System. The Grid Code also specifies day-to-day procedures for both planning and operational purposes and covers a wide range of operational conditions likely to be encountered under both normal and exceptional circumstances.

IP1.3 This Grid Code comprises any or all the Codes contained in this document and all terms defined in the Glossary and Definitions Part of this Grid Code when used in this Grid Code shall have the meanings and effect given to them in the said Part of this Grid Code.

IP1.4 For the purpose of this Grid Code, which corresponds to the current industry structure, the Grid System Operator (GSO) shall be part of TNB and responsible for operational planning, real-time re-scheduling, dispatch and control of the grid system including the requisite coordination with all parties connected to the Grid System. Other parties associated with the Grid System are collectively termed as the Users comprise of Grid Owner who owns, operates and maintains the Transmission System assets, Generators, Distributors, Directly Connected Customers, and Network Operators.

IP1.5 The Grid Code has been adopted and published by the Energy Commission in the discharge of its function “to promote efficiency, economy and safety in the generation, production, transmission, distribution, supply and use of electricity”.

IP1.6 It is recognised that prior to the introduction of this Grid Code, Generation Licensees have concluded Power Purchase Agreements (PPAs) which may be at variance to the provisions of this Grid Code. Nothing contained in this Grid Code is intended to modify the parties' rights and obligations under the Power Purchase Agreements. In the event of any conflict, the

Power Purchase Agreements take precedence only to the extent that it does not (i) affect the security and safety of the Grid System, or (ii) seek to impose any liability on the GSO in the discharge of the GSO's obligations under the Grid Code in accordance with the terms thereof.

IP2 Scope

IP2.1 The Grid Code is designed to permit the development, maintenance and operation of an efficient, coordinated and economical Grid System. It is conceived as a statement of what is optimal particularly from a technical point of view, for all Users in relation to the planning, operation and use of the Grid System.

IP2.2 The Energy Commission shall establish and maintain the Grid Code Committee which shall be a standing committee empowered by the Energy Commission to oversee the implementation of the Grid Code.

IP2.3 All Users have a duty to provide such information and resources as are necessary to facilitate compliance with and implementation of the Grid Code. The Grid Owner and GSO, in planning and operating the Grid System and in contributing to the planning and operation of the Grid System, has to rely on the accuracy of information which the Users supply regarding their plant parameters, requirements and intentions. The Grid Owner and GSO shall not be held responsible for any consequence which arises from its reasonable and prudent actions on the basis of such information supplied by any User.

IP3 General Requirements

IP3.1 While the Grid Code contains procedures for equitable management of the technical and economic aspects of the Grid System taking into account a wide range of operational conditions likely to be encountered under both normal and exceptional circumstances, it is also necessary to recognise that it cannot predict and address all possible operational situations. It also relies on compliance of all Users with the procedures in their entirety. The Users must therefore understand and accept that the GSO, in unforeseen circumstances, will act decisively, to reasonably and prudently discharge his responsibilities towards ensuring system security at all times in pursuance of any one or combination of the following General Requirements:

(1) The preservation or restoration of the Grid System integrity;

(2) The compliance of the Users with obligations imposed by their Licences or the Grid Code;
(3) The avoidance of the breakdown, separation, islanding, collapse or blackout of the whole or parts of the Grid System;
(4) The fulfillment of safety requirements under all circumstances and at all times; or
(5) The prevention of damage to Plant and Apparatus or the environment.

IP3.2 In the absence of an applicable provision of the Grid Code or any of these General Requirements, reference shall be made to the following:
(1) The application of a policy by the GSO aimed at equitable distribution among Users of any temporary restriction that might be necessary in exceptional circumstances; and
(2) The application of Prudent Utility Practice.

IP3.3 The GSO shall brief the Grid Code Committee from time to time in relation to the operational actions taken and the implementation of the provisions in the Grid Code.

IP3.4 Users shall provide such reasonable co-operation and assistance as the Grid Owner and GSO may request in pursuance of the above General Requirements, including compliance with their Licence conditions, the Grid Code and the instructions issued by the GSO.

IP4 Purpose

IP4.1 The purpose of the Grid Code is to describe the rights and responsibilities of all relevant parties towards realizing and maintaining the reliability of the Grid System. The Grid Code is an inseparable integral part of a set of legal and technical documents defining the governance of the Malaysian Electricity Supply Industry.

IP5 Constituent Parts of the Grid Code

IP5.1 The Grid Code is divided into the following Parts:
(1) Part I: Glossary and Definitions;
(2) Part II: Introduction and Purpose;
(3) Part III: General Conditions;
(4) Part IV: Planning Code;
(5) Part V: Connection Code;
(6) Part VI: Operation Code;

(7) Part VII Scheduling and Dispatch Code;
(8) Part VIII: Data Registration Code; and
(9) Part IX: Metering Code.

IP5.2 The Glossary and Definitions (GD) Part of the Grid Code contains definitions of some terms used in the Grid Code to ensure clarity to the meaning and intention of those terms.

IP5.3 The Part on Introduction and Purpose (IP) provides a general introduction to the Grid Code, its purpose and general requirements.

IP5.4 The General Conditions (GC) Part deals with all administrative aspects of the Grid Code, provisions for the revision of the Grid Code as well as resolution of disputes and procedures associated with derogations and exemptions.

IP5.5 The Planning Code (PC) Part describes the process by which the Grid Owner undertakes the planning and development of the Grid System in the planning timescales and the provision and supply of certain information by Users and the Grid Owner to enable this process.

IP5.6 The Connection Code (CC) Part specifies the minimum technical, design and operational criteria which must be complied with by Users connected or seeking connection or seeking to modify their connection to the Grid System.

IP5.7 The Operating Code (OC) Part, which is split into a number of individual Codes deals with all processes associated with Operational Planning and Control Operation of the system in real time and obligations of the Users to provide and supply information to the Grid Owner and GSO to enable those processes. The Operating Codes comprise:

(1) The sequence in Operational Planning and Control Operation of the system starts with forecasting the Demand in the operational timescales in accordance with Operating Code No 1 - Demand Forecast (OC1) with demand data received from Users. The Grid Owner aggregates this data and prepares the appropriate Demand Forecasts for use in operational timescales;
(2) The GSO also receives planned outage data from the Users and co-ordinates the outage requests in respect of Generating Units, the TNB Transmission System and User Systems for construction, repair and maintenance in accordance with Operating Code No 2 – Outage and Other Related Planning (OC2);

(3) The Single Buyer prepares annual and weekly generation plans taking into account the planned generation, transmission and other User outages, availability of demand control and specifying the different types of reserve and response required for frequency and voltage control, based upon the provision of certain types of User data in accordance with Operating Code No 3 - Operating Reserves and Response (OC3);

(4) The procedures to be applied in relation to the various forms of Demand Control methods available to the GSO in operating the system and their implementation in Operational Planning and Control Operation in real time are in accordance with Operating Code No 4 - Demand Control (OC4);

(5) The procedures and their implementation for communication and liaison between the GSO and the Users for coordinating the operation of the system are in accordance with Operating Code No 5 - Operational Liaison (OC5);

(6) The reporting of scheduled and planned actions and significant unscheduled occurrences such as faults and investigation of the impact of such occurrences are in accordance with Operating Code No 6 – Significant Incident Reporting (OC6);

(7) The actions to be taken by the GSO in preparing operational strategies towards maintaining the integrity of the system under severe system contingencies beyond the security criteria, and implementation of those strategies are in accordance with Operating Code No 7 – Emergency Operations (OC7);

(8) The co-ordination between GSO and User, in the establishment and maintenance of Isolation and Earthing in order that work and/or testing can be carried out safely at a Connection Point in accordance with Operating Code No 8 - Safety Coordination (OC8);

(9) The procedures for numbering and nomenclature of HV Apparatus at certain sites where new construction is to be integrated or changes are to be made to an existing Connection Point in accordance with Operating Code No 9 - Numbering and Nomenclature (OC9);

(10) The procedures for testing and monitoring of the effects of a User's System on the Transmission System and vice versa are in accordance with Operating Code No 10 - Testing and Monitoring (OC10); and

(11) The procedures for the establishment of system tests where commissioning and testing of equipment and its capability may require application of unusual or irregular operating conditions in accordance with Operating Code No 11 - System Tests (OC11).

IP5.8 The Grid Code also contains a Scheduling and Dispatch Code, which is split into three (3) Codes as follows:

(1) based upon the prices quoted in Power Purchase Agreements (PPAs and certain other technical performance and outage information, the preparation of an indicative Least Cost Generation Schedule indicating which Generating Units may be instructed or dispatched the following day in accordance with Scheduling and Dispatch Code No 1 - Generation Scheduling (SDC1). This is carried out by the Single Buyer;

(2) the issue of Control, Scheduling and Dispatch instructions to Generating Units, and the receipt and issue of certain other information in accordance with Scheduling and Dispatch Code No 2 - Control, Scheduling and Dispatch (SDC2). This is carried out by the GSO; and

(3) the procedures and requirements in relation to control of system frequency control and interconnector power transfers in accordance with Scheduling and Dispatch Code No 3 - System Frequency and Interconnector Transfer Control (SDC3). This is carried out by the GSO.

IP5.9 The Grid Code also contains a Data Registration Code, which sets out a unified listing of all data required by the Grid Owner and GSO from Users, and by Users from the Grid Owner and GSO, under all of the constituent Parts of the Grid Code.

IP5.10 The Metering Code included in the Grid Code deals with transmission metering at the Connection Points and at the interface with the Generation, Distribution and User Systems. The Metering Code includes the basic requirements for both Revenue and Operational Metering.

<End of Part II: Introduction and Purpose>

Part III: General Conditions

GC1 Introduction

GC1.1 Each specific Code within the Grid Code contains the provisions specifically relating to that particular Code. The General Conditions contain provisions which are of general application to all provisions of the Grid Code. The General Conditions are provided to ensure that the various Parts of the Grid Code work together.

GC2 Scope of Application

GC2.1 The General Conditions apply to the EC, the GSO, the Grid Owner, the Single Buyer and all Users.

GC3 Objectives

GC3.1 The objectives of the General Conditions are as follows:

(1) to ensure, to the extent possible, that various Parts of the Grid Code work together for the benefit of all the relevant parties and the GSO; and

(2) to provide a set of principles governing the status and the development of the Grid Code.

GC4 Interpretation

GC4.1 In this Grid Code, unless the context otherwise requires:

(1) references to Grid Code are with reference to the whole of the Grid Code, including any schedules or other documents attached to any part of the Grid Code;

(2) the singular includes the plural and vice versa; and

(3) any reference to one gender includes others.

GC4.2 In this Grid Code, references to parts, codes, paragraphs, clauses or schedules are specifically to those codes, paragraphs, clauses or schedules of this Grid Code. In this Grid Code:

(1) the headings are for convenience and reference only and do not form part of the Grid Code;

(2) reference to any law, regulation made under any law, Licence Standards, secondary legislation, contract, agreement or other legal

document shall be to that law, regulation or document as amended, modified or replaced from time to time. Any reference to any Licence shall be to that Licence as amended, modified or replaced from time to time and to any rule, document, decision or arrangement promulgated or established under that Licence;

(3) references to the consent or approval of the Energy Commission shall mean the approval or consent of the Energy Commission in writing, which may be given subject to such conditions as may be determined by the Energy Commission, as that consent or approval may be amended, modified, supplemented or replaced from time to time and to any order, instruction or requirement or decision of the Energy Commission given, made or issued under it;

(4) all references to specific dates or periods of time shall be calculated according to the Gregorian calendar and all references to specific dates shall be on the day commencing on such date at 00:00 hours;

(5) where words or expressions are defined in this Grid Code, cognate words and expressions shall be construed accordingly;

(6) references to "person" or "persons" include individuals, firms, companies, state government agencies, federal government agencies, committees, departments, ministries and other incorporate or unincorporated bodies as well as to individuals with a separate legal personality or not; and

(7) the words "such as", "include", "including", "for example" and "in particular" shall be construed as being by way of illustration or emphasis and shall not limit or prejudice the generality of any foregoing words.

GC5 Grid Code Committee (GCC)

GC5.1 The Energy Commission shall establish and maintain the Grid Code Committee which shall be a standing committee empowered by the Energy Commission to oversee the implementation of the Grid Code.

GC5.2 In particular the Grid Code Committee shall:

(1) ensure the relevancy of the Grid Code;

(2) review all suggestions for amendments to the Grid Code which the Energy Commission, GSO, Grid Owner, Single Buyer or any User may wish to submit for consideration by the Grid Code Committee from time to time;

(3) publish recommendations as to amendments to the Grid Code that the GSO or the Grid Code Committee feels are necessary or desirable and the reasons for the recommendations;

(4) issue its guidance in relation to the Grid Code and to ensure implementation, performance and interpretation when asked to do so by any User;
(5) consider what changes are necessary to the Grid Code arising out of any unforeseen circumstances referred to it by the GSO under GC7,
(6) appoint an independent External Auditor to conduct an external audit on the operations of the GSO and Single Buyer, and
(7) review and forward reports received from the External Auditor under GC7.

GC5.3 The Grid Code Committee shall consist of:

(1) two (2) representatives from the GSO;
(2) one (1) representative from Single Buyer;
(3) two (2) representatives from the Energy Commission (as observers);
(4) one (1) representatives from TNB Transmission representing engineering, protection, maintenance and projects;
(5) one (1) representative from TNB Planning Division;
(6) six (6) representatives from IPPs representing members and non-members of the IPP Association;
(7) two (2) representatives from TNB Generation;
(8) two (2) representatives from TNB Distribution;
(9) one (1) representative from the Minor Distributors; and
(10) one (1) independent technical expert nominated by the Energy Commission each of whom shall be appointed pursuant to the rules issued pursuant to GC5.4.

GC5.4 The members of the GCC shall have sufficient technical background and experience to fully understand and evaluate the technical aspects of grid operation/planning and development. The Chairman of the GCC shall be the Energy Commission.

GC5.5 The GSO shall assume the role of secretariat to the GCC. The Secretary of the GCC shall be from within GSO.

GC5.6 The Grid Code Committee shall establish and comply at all times with its own rules and procedures relating to the conduct of its business, which shall be approved by the Energy Commission. It may establish other subcommittees as necessary.

GC5.7 The GSO shall fund the operations of the GCC and its subcommittees, including permanent support staff exclusively provided for functioning of committee and subcommittee(s), and recover the costs through an appropriate provision in the annual revenue requirements. The salaries of

all members of the GCC and the subcommittee(s) shall be the responsibility of their respective employers or sponsoring organization.

GC6 General Procedure for the Grid Code Committee

GC6.1 Any member of the Grid Code Committee can submit a proposal for an amendment to the Grid Code. In addition, the GSO has a duty to promptly refer all unforeseen circumstances for discussion. These would be in the form of a discussion paper brought for consideration as part of the agenda of a Grid Code Committee meeting.

GC6.2 The Chairman and the Secretary will notify the Grid Code Committee members of the proposed amendment no less than twenty (20) Business Days in advance of the next scheduled Grid Code Committee meeting. In circumstances requiring urgent action this notification may be waived by agreement of the Chairman of the Grid Code Committee.

GC6.3 After discussion of the matter at the meeting, the Grid Code Committee may reach a decision or may request or appoint a group of technical experts to prepare a proposal for the amendment detailing the specific clauses of the Code that should be amended and the text of the proposed amendment within a set timescale. Any amendments shall include changes to a specific clause and all other affected clauses.

GC6.4 The decision of the Grid Code Committee or the recommendations of the technical experts with regard to the proposed amendments will be circulated in writing by the GSO to all parties holding a Licence issued by Energy Commission which are liable to be materially affected in relation to any proposed amendments to the Grid Code for comment within four (4) weeks. On completion of consultation, the GSO shall submit all proposed amendments to the Grid Code, to the Grid Code Committee for final agreement and submission for approval by the Energy Commission.

GC6.5 All presentations and views associated with a proposed amendment will be made at the Grid Code Committee meeting or through written comments during the consultation process. It is the duty of the User providing such written comments to circulate such comments made during the consultation process to the members of the Grid Code Committee.

GC6.6 Following agreement on any proposed amendment it will be submitted to the Energy Commission for approval and an effective date for the implementation of the revision to the Grid Code will be set by the Energy Commission. It is recognised that in rare cases it may be necessary to

establish interim arrangements and/or derogations and/or exemptions until the new amended version of the Grid Code becomes effective. It is the duty of the Chairman of Grid Code Committee to notify each User of the effective date.

GC6.7 The Secretary of the Grid Code Committee has a duty to hold appropriate records of the amendments to the Grid Code through an auditable version control process. Appropriate version and controlled copy markings will be included and any uncontrolled copies without these markings will be regarded as invalid.

GC6.8 The latest version of the Grid Code will be published by the GSO on the GSO's website. A hardcopy version of the Grid Code is available on request from the GSO. Controlled copies of the Grid Code are maintained at both the offices of the GSO and the Energy Commission.

GC7 External Audit on GSO and Single Buyer Operations

GC7.1 The GCC shall appoint an independent External Auditor to perform the following functions:

(1) Review the GSO and Single Buyer operations,

(2) Review of performance of the GSO and Single Buyer in complying with the provisions of the Malaysian Grid Code (especially relating to scheduling);

(3) Prepare and submit operational reviews to the GCC and Energy Commission;

(4) Evaluate and make recommendations on significant grid events; and

(5) Identify difficulties observed in implementing the Grid Code and make necessary recommendations to the GCC

GC7.2 The rules and procedures for the functions of the External Auditor shall be formulated by the GCC and approved by the Energy Commission.

GC7.3 The External Auditor shall have sufficient technical background and experience in Grid Operations. The appointment of the External Auditor shall be as and when required.

GC7.4 The GSO shall provide secretarial support to the External Auditor.

GC8 Unforeseen Circumstances

GC8.1 The Grid Code contains procedures under which the GSO, in pursuance of its obligations will receive information from Users relating to the intentions of such Users in the course of planning and operating the Grid System.

GC8.2 If circumstances arise which the provisions of the Grid Code have not foreseen, the GSO shall, to the extent reasonably practicable in the circumstances, consult promptly and in good faith all affected Users in an effort to reach agreement as to what should be done. If agreement between the GSO and those Users cannot be reached in the time available, the GSO shall determine what actions, if any, should be taken and shall notify the Energy Commission of this determination as soon as practicable thereafter.

GC8.3 Wherever the GSO makes a determination, it shall do so having regarded, in any event, to what is reasonable in all the circumstances with Grid System security and safety taking precedence at all times.

GC8.4 Each User shall comply with all instructions given to it by the GSO following such a determination provided that the instructions are consistent with the current technical parameters of the particular User's System registered under the Grid Code. The GSO shall promptly refer all such unforeseen circumstances and any such determination to the Energy Commission for consideration and thereafter to the Grid Code Committee in accordance with GC5.2 (5).

GC9 Derogations and Exemptions

GC9.1 It is the sole responsibility of a User to verify his continual compliance with any provision of the Grid Code. In cases where a User finds that it is or it will be unable to comply with any provision of the Grid Code, then it shall, without any delay, report such non-compliance to the Energy Commission and the GSO who will in turn inform the Grid owner and Single Buyer. It is extremely important for the GSO to be made aware of any non-compliance as this may cause the GSO to make operational decisions which may jeopardise integrity and safety of parts or the whole of the Grid System.

GC9.2 The User will promptly discuss with the GSO the proposed remedy to restore compliance and the GSO will identify the operational measures required to ensure secure operation of the Grid System. The User and the GSO will then submit the agreed solution and timescales to complete the remedy to the Energy Commission for approval. The Energy Commission will then issue the appropriate temporary derogation, with a time limit, to the User and request the GSO and the User to report progress of the remedy.

GC9.3 On completion of the remedy within such time limit, the temporary derogation will be withdrawn by the Energy Commission. This process should be completed on an urgent basis so that all measures to the remedy are in place and the additional costs to the system are minimized.

GC9.4 In spite of any technical derogation or exemption granted by the Commission, the derogated party shall act, wherever possible, in the interest of safety of the grid system and try to follow the instructions of the GSO in this regard due to technical constraints on part of the derogated party. Any non-compliance in this regard, however, may not be viewed as contractual violation with commercial implications.

GC9.5 The non-compliance may be with reference to Plant and Apparatus:

(1) which is already connected to the Grid System and is caused by solely or mainly as a result of a revision to the Grid Code;

(2) which is already connected to the Grid System and is caused by a developed or developing partial defect and where the Plant and Apparatus may remain operable albeit with some operational constraints or at reduced capability; and

(3) which is seeking approval for connection to the Grid System.

GC9.6 In cases where a User believes that remedying such non-compliance is unreasonable for technical or financial reasons or requires an extended period to remedy such non-compliance, it shall promptly submit a request to the Energy Commission with a copy to the GSO for a full Derogation from remedying or an extension to the period for implementing the remedy.

GC9.7 If the GSO finds that it is or will be unable to comply with any provision of the Grid Code at any time, then it shall notify the Energy Commission promptly with a proposal and a timescale for remedy.

GC10 Derogation Request and Issue Process

GC10.1 A request for derogation from the Grid Owner or a User shall contain:

(1) reference to the particular Grid Code provision against which the particular non-compliance or the predicted or developing non-compliance was identified;

(2) the particulars of the Plant and/or Apparatus in respect of which a derogation is being sought;

(3) the reason, nature, extent and impact of the non-compliance;

(4) the predicted period of non-compliance and the timescale by which full compliance could be achieved; and

(5) the reason for and impact of extended periods of non-compliance if full compliance cannot be achieved for technical or financial reasons.

GC10.2 On receipt of any request for Derogation the Energy Commission shall promptly consider and discuss the request with the Grid Owner, User, GSO and GCC. In considering granting the derogation the Energy Commission would fully take into account the views of the GSO and GCC on whether the derogation would, or is likely to:

(1) have material and adverse impact on the security and/or stable operation of the Grid System; or

(2) impose high or unreasonable costs on the operation of the Grid System.

GC10.3 Dependent upon the nature of the Derogation being sought a temporary Derogation with a time limit or a long term Derogation or Exemption may be granted by the Energy Commission subject to full agreement of the GSO being able to continue to fulfill its duties for the secure and economic operation of the system.

GC10.4 In consideration of a Derogation request by the Grid Owner or a User, the Energy Commission may seek all necessary clarification and external expert assistance in making his determination.

GC10.5 To the extent of any Derogation granted in accordance with this GC9, following granting of a Derogation to the User and/or the GSO, the party or parties shall be relieved from any obligation to comply with the applicable provision of the Grid Code and shall not be liable for failure to comply but shall comply with any alternative provisions specified in the Derogation.

GC10.6 It is the duty of both the GSO and the Energy Commission to keep comprehensive respective registers of all derogations granted with respect to the Grid Owner and/or Users. These registers shall contain fully detailed account of the nature of the Derogation and its effective period. The GSO shall also provide copies of the registers to the Single Buyer.

GC10.7 It is the duty of both the GSO and the Energy Commission to annually review existing derogations and take into account of any material changes in the circumstances if such a change has occurred.

GC10.8 The Grid Owner and/or Users may request a review of any existing Derogation.

GC11 Derogations for Existing Contracts or Agreements

GC11.1 If any contract, agreement or arrangement exists at the date this Grid Code comes into force the Energy Commission shall make a determination whether the technical conditions of the specific contract, agreement or arrangement are in line with the provisions of the Grid Code in consultation with the GSO and the Single Buyer.

GC11.2 If the technical conditions of the specific contract, agreement or arrangement are in line with the provisions of the Grid Code then the Grid Code shall prevail.

GC11.3 If the technical conditions of the specific contract, agreement or arrangement preclude compliance with certain provisions of the Grid Code then an appropriate specific Derogation or Exemption will be issued to the User, by the Energy Commission after consultation with the GSO and the Single Buyer.

GC11.4 The provision of a specific technical derogation or exemption does not release the Derogated Party from compliance with all other provisions of the Grid Code and the provisions of any commercial agreement or from any commercial liability arising from such technical derogation or exemption.

GC12 Illegality and Partial Invalidity

GC12.1 If any provision of the Grid Code should be found to be wholly or partially unlawful or invalid for any reason, the validity of the remaining provisions of the Grid Code shall remain unaffected.

GC12.2 If part of a provision of the Grid Code be found to be unlawful or invalid for any reason but the rest of such a provision would remain valid if part of the wordings were deleted, the provision shall apply with such minimum modification as may be:

(1) necessary to make it valid and effective; and
(2) most closely achieves the result of the original wording but without affecting the meaning or validity of any other provision of the Grid Code.

GC12.3 In cases mentioned in GC11.2, the GSO shall prepare a proposal for correcting the default for consideration by the Grid Code Committee.

GC13 Notices Under the Grid Code and Communication

GC13.1 Instructions by the GSO

GC13.1.1 Unless otherwise specified in the Grid Code, all instructions, other than SCADA instructions, given by the GSO and communications (other than relating to the submission of data and notices) between the GSO and Users (other than Generators) shall take place between the Control Engineer based at the National Load Dispatch Centre (NLDC) notified by the GSO to each User prior to connection, and the relevant Users Responsible Engineer/Operator, who will be based at the Control Centre or Location notified by the User to the GSO prior to connection, subject to the agreement of the GSO.

GC13.1.2 Unless otherwise specified in the Grid Code all instructions, other than SCADA instructions, given by the GSO and communications (other than relating to the submission of data and notices) between the GSO

and the Generators shall take place between the Control Engineer based at the National Load Dispatch Centre (NLDC) notified by the GSO to each Generator prior to connection, and the relevant Generator's Control Point notified to the GSO by the Generator, subject to agreement of the GSO. In the absence of notification to the contrary, the Control Point of a Generator's Power Station will be deemed to be the Power Station at which the Generating Units are situated.

GC13.1.3 In the case of SCADA instructions, these will be sent directly to the Generating Unit or Equipment or Plant or Apparatus as the case may be to which the instruction relates.

GC13.1.4 Unless otherwise specified in the Grid Code, all instructions, other than SCADA instructions, given by the GSO and communications (other than relating to the submission of data and notices) between the GSO and the Users will be given by means of the Control Telephony or by Facsimile transmission or agreed electronic means referred to in Connection Code CC6.6.

GC13.1.5 If the National Load Dispatch Centre (NLDC) or the User's Control Center or the Generator's Control Room, is moved to another location, whether due to an emergency or for any other reason, the GSO shall notify the relevant User or the User shall notify the GSO, as the case may be, of the new location and any changes to the Control Telephony necessitated by such move, as soon as practicable following the move.

GC13.1.6 The recording (by whatever means) of instructions or communications given by means of Control Telephony will be accepted by the GSO and Users as evidence of those instructions or communications.

GC13.2 Data and Notices

GC13.2.1 Any data and notices to be submitted or given under the Grid Code (other than data which is the subject of a specific requirement of the Grid Code as to the manner of its delivery) shall be in writing duly signed by or on behalf of a person duly authorised to do so by the party submitting or giving the data or notice and delivered by hand, sent by post, or facsimile transmission or by e-mail to the relevant person in accordance with a pre-determined protocol.

GC13.2.2 The GSO shall maintain a master list of all contact details for itself and all Users containing the telephone, facsimile, e-mail and postal

addresses enabling unfettered communication at all times both under normal, exceptional and emergency operational conditions. It is the duty of all parties to ensure prompt notification of any changes in their contact details to all other parties. The GSO has the duty of keeping this master list up to date and promptly circulating any changes to all parties.

GC13.2.3 Any data or notice (other than data which is the subject of a specific requirement of the Grid Code as to the manner of its delivery) sent under this Grid Code shall be deemed to have been given or received;

(1) at the time of delivery, if sent by hand; or
(2) unless otherwise proven, within four (4) business days after posting if sent by recorded delivery; or
(3) subject to confirmation by transmission report, if sent by facsimile; or
(4) subject to receipt of confirmation report from the receiving party, or otherwise the Business Day after the e-mail has been sent.

The GSO shall establish a Communication Protocol with auditable acknowledgement of receipt of communication by all parties who are the recipients of the data or notice.

GC13.2.4 All data items, where applicable, will be referenced to nominal parameters such as nominal Voltage and Frequency unless otherwise stated.

GC14 Ownership of Plant and Apparatus

GC14.1 References in the Grid Code to Plant and/or Apparatus of a User include Plant and/or Apparatus used by a User under any agreement with a third party.

GC15 Grid Code Disputes

GC15.1 If any dispute arises between the Grid Owner, Users, Single Buyer and/or the GSO in relation to this Grid Code, either party may by following the procedures under GC12 give notice to the other seeking to resolve the dispute by negotiation in good faith and without prejudice. If the parties fail to resolve any dispute, then either party may refer the matter to the Energy Commission for determination. In this case the Energy Commission shall determine the dispute itself unless it feels there are cogent reasons to refer the dispute to arbitration.

GC15.2 In cases where the Energy Commission decides to determine a dispute itself, the practice and procedure to be followed in the determination of any dispute shall be such as the Energy Commission may consider appropriate. Any order in resolution of a dispute made by the Energy Commission may include a provision requiring either party to pay costs or expenses incurred by the Energy Commission in determining the dispute.

GC15.3 If the Energy Commission refers the dispute for arbitration, the Energy Commission shall serve a written notice on the parties to the dispute to that effect and the rules of arbitration of the Regional Centre of Arbitration Kuala Lumpur (RCAKL) shall apply. The rules of arbitration under such auspices of the centre are the UNCITRAL Arbitration Rules of 1976 with certain modifications and adaptations as set forth in the rules of arbitration of RCAKL.

GC15.4 Any arbitration conducted in accordance with GC15.3 shall be conducted in Kuala Lumpur, in English, by a single arbitrator in accordance with the laws of Malaysia.

GC15.5 Where the Grid Code provides that any dispute or difference between parties in relation to a particular matter should be referred to an expert for resolution, such dispute or difference may not be referred to arbitration unless and until such expert determination has been sought and obtained.

GC16 Grid Code Confidentiality

GC16.1 Parts of this Grid Code specify the extent of confidentiality which applies to data supplied by Users to the Grid Owner and the GSO and by the Grid Owner and the GSO to Users. Unless otherwise specifically stated in the Grid Code, the Grid Owner and the GSO shall be obliged to share defined data with Users and the Single Buyer likely to be affected by the matters concerned and with the Energy Commission.

GC17 Applicable Law

GC17.1 The law applicable to this Grid Code shall be the Laws of Malaysia.

<End of Part III: General Conditions>

< This page has been intentionally left blank >

Part IV: Planning Code

PC1 Introduction

PC1.1 The Planning Code (PC) specifies the technical and design criteria and procedures to be applied by the Grid Owner in the planning and development of the Grid System and to be taken into account by Users in the planning and development of their own User Systems and their connections to the Grid System. It details information to be supplied by Users to the Grid Owner and certain information to be supplied by the Grid Owner to Users. It shall be the responsibility of the Grid Owner to pass on to GSO the relevant information required for operational planning.

PC1.2 The Planning Code also specifies the procedures to be applied by the Grid Owner, in calculating the generation adequacy and capacity requirements for the next ten (10) succeeding years and to notify the Energy Commission of these requirements as in PC5.2.

PC1.3 The Users referred to above are defined, for the purpose of the PC, in PC3.1.

PC1.4 Development of the Transmission System, involving its reinforcement or extension, will arise for a number of reasons including, but not limited to:

(1) a development on a User System already connected to the Transmission System;
(2) the introduction of a new Connection Site or the Modification of an existing Connection Site between a User System and the Transmission System;
(3) the cumulative effect of a number of such developments referred to in (1) and (2) above by one or more Users.

PC1.5 Accordingly, the reinforcement or extension of the Transmission System may involve work:

(1) at a substation at a Connection Site where User's Plant and/or Apparatus is connected to the Transmission System;
(2) on transmission lines or other facilities which join that Connection Site to the remainder of the Transmission System;
(3) on transmission lines or other facilities at or between points remote from that Connection Site.

PC1.6 The time required for the planning and development of the Grid System will depend on the type and extent of the necessary reinforcement and/or extension work, the need or otherwise for statutory planning consent, wayleave (rentice) acquisition, the associated possibility of the need for a public inquiry and the degree of complexity in undertaking the new work while maintaining satisfactory security and quality of supply on the existing Grid System.

PC1.7 Since the planning and development of the Grid System requires sufficient lead time to allow for any necessary consent to be obtained and detailed engineering design/construction work to be completed, this Planning Code imposes an appropriate timescale on the exchange of information between the Grid Owner and Users, subject to all parties having regard, where appropriate, to the confidentiality of such information as specified in this Planning Code.

PC2 Objectives

PC2.1 The objectives of the Planning Code are:

(1) to promote interaction between the Grid Owner and Users in respect of any proposed development on the User Systems which may impact on the performance of the Grid System or the direct connection with the Transmission System;

(2) to provide for the supply of information required by the Grid Owner from Users in order for the Grid Owner to undertake the planning and development of the Grid System in accordance with the relevant License Standards, to facilitate existing and proposed connections, and also to provide for the supply of certain information from the Grid Owner to Users and from Users to the Grid Owner in relation to short circuit current contributions and other relevant information;

(3) to specify the Licence Standards, which will be used by the Grid Owner in the planning and development of the Grid System;

(4) to provide for the supply of information by the Grid Owner required by the Energy Commission of the future generation adequacy and capacity requirements and the notification of the Energy Commission on an annual basis or as required by the Energy Commission; and

(5) to provide sufficient information to the Energy Commission on the optimal points for connection to the Grid System.

PC3 Scope

PC3.1 The PC applies to the Grid Owner, GSO , Single Buyer and following Users:

(1) Generators;
(2) Distributors;
(3) Network Operators;
(4) Directly Connected Customers; and
(5) Parties seeking connection to the Transmission System or on to a User System.

PC3.2 The above categories of User will become bound by the PC prior to them generating, supplying or consuming, as the case may be, and references to the various categories (or to the general category) of User should, therefore, be taken as referring to them in that prospective role as well as to Users actually connected to the Transmission System.

PC3.3 It is the responsibility of each User to keep the Grid Owner, and the Single Buyer informed of all changes, and supply all required information in accordance with the requirements of the Planning Code.

PC3.4 In the case of Embedded Power Stations, unless otherwise provided, the following provisions apply with regard to the provision of data under this PC:

(1) each Generator shall provide the data directly to the Grid Owner ;
(2) although data is not normally required specifically on Embedded Minor Generating Power Stations under this PC, each Distributor and Network Operators in whose System it is Embedded should provide the data contained in the Appendix A to the Grid Owner if:
    (a) it is required by the Grid Owner to be supplied pursuant to the application for a connection or modification of a connection with the Distributor or Network Operator as the case may be; or
    (b) it is specifically requested by the Grid Owner in the circumstances provided for under this PC.

PC3.5 Certain data does not normally need to be provided in respect of certain Embedded Power Stations, as provided in PCA.1.5.8.

PC3.6 The calculation of the future generation adequacy and capacity requirements and the notification to the Energy Commission on an annual basis or as required by the Energy Commission, as in PC5.2, is

the responsibility of the Grid Owner. All Users and appropriate Government Agencies shall provide all the information required by the Grid Owner to enable the preparation of the calculation as required by the Energy Commission to the timescales specified by the Energy Commission to the Grid Owner.

PC3.7 Any information relating to the changes on an existing Interconnection and the potential establishment of a new Interconnection will be between the Grid Owner and the Single Buyer. The Grid Owner shall take appropriate account of these changes and new connections in planning the development of the system and in the calculation of generation adequacy and capacity requirements.

PC4 Development of the Grid System and Applicable Standards

PC4.1 The Grid Owner shall apply the License Standards relevant to planning, connection to and development of the Grid System. Potential Users may request connections to the Transmission System which are above or below the established Licence Standards. In cases where potential Users have requested connections below the minimum required by the standards the Grid Owner may refuse such a connection if it is likely to adversely affect other Users connected to the system. Requests for connections above the requirements of the Licence Standards are subject to agreement between the Grid Owner and the potential User.

PC4.2 The Grid Owner shall also apply the Licence Standards in ensuring compatibility of the connections from the Transmission System to Distribution or Network Operator Systems or User Networks as the case may be.

PC4.3 The Users shall also apply and fully take into account of and comply with the Licence Standards relevant to planning, connection to and development of the Grid System, in the development of their own Power Stations, Distribution Systems and User Networks.

PC4.4 The Energy Commission is able to assess the opportunities for connection to and the future development of the system through the annual System Development Statement.

PC4.5 The Grid Owner shall by the end of August each year produce a System Development Statement showing for each of the succeeding ten (10) years the opportunities available for connecting to and using the Transmission System and indicating those parts of the Transmission System most suited to new connections and transport of further quantities of electricity. This shall take into account all the developments planned by the Grid Owner and the developments notified to the Grid Owner by the Users through connection applications and relevant Agreements.

PC4.6 The System Development Statement which is submitted to the Energy Commission, identifies and evaluates the opportunities for connection in Peninsular Malaysia. The document shall at least include but not limited to the following:

(1) Grid System and background to system development;
(2) aggregated load forecast;
(3) Generation Plant capacity developments including existing and Licenced plant and plant under construction;
(4) Generating Plant capacity requirements for compliance with Generation Reliability Standard;
(5) Existing and planned transmission developments including the requirements for equipment replacement and technology up-gradation;
(6) Transmission System capability including load flows and system fault levels;
(7) Transmission System performance information including frequency and voltage excursions and fault statistics; and
(8) Commentary indicating those parts of the Transmission System considered most suited to new connections and transport of further quantities of electricity.

PC4.7 Upon receipt of an application for connection or a modification to a Connection Site, the Grid Owner shall carry out appropriate studies to recommend a connection arrangement compliant with the Grid Code for connection to the Transmission System.

PC4.8 The details for a Connection Application, or for a variation of an existing Connection, as the case may be, to be submitted by a User will include:

(1) a description of the Plant and/or Apparatus to be connected to the Transmission System or of the Modification relating to the User's Plant and/or Apparatus already connected to the Transmission

System or, as the case may be, of the proposed new connection or Modification to the connection within the User System of the User, each of which shall be termed a "User Development" in the PC;

(2) the relevant Standard Planning Data as listed in Part 1 of the Appendix A; and

(3) the desired Completion Date of the proposed User Development.

PC4.9 The completed application form for a Connection Application, or for a variation of an existing Connection, as the case may be, will be sent to the Grid Owner as more particularly provided in the application form provided by the Grid Owner.

PC4.10 Any offer of a Connection, made by the Single Buyer, will provide that it must be accepted by the applicant User within the period stated in the offer, after which the offer automatically lapses. Acceptance of the offer renders the works relating to that User Development, reflected in the offer, committed and binds both parties to the terms of the offer. Within twenty eight (28) days (or such longer period as the Single Buyer agrees in consultation with the Grid Owner may agree in any particular case) of acceptance of the offer the User shall supply the Detailed Planning Data to the Grid Owner pertaining to the User Development as listed in Part 2 of the Appendix A.

PC4.11 On submission of the annual System Development Statement to the Energy Commission, the Grid Owner shall fully brief the Energy Commission on the generation requirements, connection opportunities and system developments for the next ten (10) years.

PC5 The Planning Process

PC5.0 General

PC5.0.1 The Grid Owner shall annually prepare the System Development Plan, which shall include a Demand Forecast, Generation Development Plan, Transmission Development Plan and System Development Statement to identify the system developments required to ensure compliance with the Licence Standards for submission to the Energy Commission in accordance with the procedures and data received from Users as described in this PC5 and elsewhere in this Planning Code.

PC5.0.2 Each User shall submit Standard Planning Data and Detailed Planning Data, as more particularly specified in PCA.1.4. Where the User has

more than one Connection Point then appropriate data is required for each Connection Point.

PC5.0.3 Data shall be annually submitted by the Users by the end of September in the current year "Year 0" and for each year for the ten (10) succeeding years.

PC5.0.4 The Users shall submit data in writing on "by exception" basis submitting only the relevant changes to the data from the previous data submission or by declaring "no change" if this is the case.

PC5.0.5 It is the responsibility of the User to submit accurate data in relation to its planned developments and the timescales in which these developments will be implemented. The Users also have the responsibility of notifying any changes to their planned developments without waiting for the annual data submission.

PC5.0.6 In order to enable an agreement to be reached with the User over any changes and/or developments proposed, the Grid Owner shall notify each User of any material modifications of their annual Transmission Development Plan submissions that may concern that User.

PC5.0.7 A full Planning Data submission must be provided by a User when applying for a new connection or modifications to an existing connection to the Transmission System. This data shall include any changes to the User Network and the operating regime. In these submissions the User must always provide Standard Planning Data. Provision of the Detailed Planning Data shall be at the request and in accordance with the requirements of the Grid Owner. The notification shall also include a full timetable for the implementation and effective date at which the proposed connection or modifications will become fully operational.

PC5.0.8 To enable Users to model the Transmission System in relation to short circuit current contributions, the Grid Owner is required to submit to Users the Network Data as listed in Part 3 of the Appendix A. The data will be submitted in August of each year and will cover the following five (5) years.

PC5.1 Demand (Load) Forecasting

PC5.1.1 The primary responsibility to forecast the electricity Demand (Load) and electrical Energy Requirements of customers in their respective areas, rests with the Distributors and Users with User Networks as specified in the terms of their respective Licenses. The demand forecasts shall be prepared to include the data specified in Appendix A and any additional data or clarification as may be requested by the Grid Owner.

PC5.1.2 As part of the preparation of the annual System Development Statement as in PC4, Generation Development Plan as in PC5.2 and Transmission Development Plan, the Grid Owner shall have the responsibility to aggregate the Demand (Load) and Energy Requirement forecast data received from Distributors and Users with User Networks. The single Demand (Load) and Energy Requirements forecast prepared by the Grid Owner covering the next ten (10) succeeding years shall form the basis for the preparation of the annual System Development Statement by the Grid Owner.

PC5.1.3 It is also the primary responsibility of the Distributors and Network Operators and Users with User Networks to notify the Grid Owner of any material changes to their forecasts of Demand (Load) and electrical Energy Requirements at the end of September and at the end of March each year.

PC5.1.4 The Grid Owner shall fully take the Demand (Load) and Energy that has been contracted by the Single Buyer from Externally Interconnected Party(ies) into account in the preparation of the annual single Demand (Load) and Energy Requirements covering the next ten (10) succeeding years.

PC5.2 Generation Adequacy Planning

PC5.2.1 In addition to the preparation of the annual System Development Statement, the Grid Owner is also required to annually calculate the generation adequacy and capacity requirements for the next ten (10) succeeding years and to notify the Energy Commission of these requirements in a Generation Development Plan.

PC5.2.2 In annually calculating the generation adequacy and capacity requirements for the next ten (10) succeeding years, the Grid Owner,

shall fully take into account the demand forecast scenarios prepared by the Grid Owner taking into account the following factors:

(1) the single aggregated Demand (Load) and Energy Requirements forecast prepared by the Grid Owner covering the next ten (10) succeeding years including the maximum and minimum demands as well as demands on holidays and special days;
(2) the amount and nature of the existing Generation Capacity at the time of the preparation of the calculations, the scheduled and forced outage rates of the existing generating plant and its scheduled outage programme and durations of those outages for maintenance;
(3) Generating Plant already approved and under construction and typical scheduled and forced outage rates and duration of such outages;
(4) the Demand (Load) and Energy that has been contracted by the Single Buyer from Externally Interconnected Party(ies);
(5) National and International Economic growth forecasts;
(6) electrical and other forms of energy sale statistics and market share data; and
(7) Government of Malaysia (GOM) fuel and energy policy.

PC5.2.3 In preparing the annual Generation Development Plan, the Grid Owner shall apply the security and connection criteria included in the Generation Reliability Standard forming part of the Licence Standards.

PC5.2.4 In addition to applying the Loss of Load Probability (LOLP) based Generation Reliability Standard, the Grid Owner shall also take into account the size of the largest Generating Unit connected to the system or the largest import across an Interconnection that can be accommodated on the system.

PC5.2.5 It is the duty of the Grid Owner to carry out calculations that quantify the technical and financial impact of introducing generating unit sizes or interconnector import which increases the Largest Power Infeed Loss Risk (due to the loss of the largest generator or interconnector import) specified in the Generation Reliability Standard. This quantification shall evaluate the additional Dynamic Spinning Reserve that would be required and an assessment as to whether frequency control within the limits specified in the Transmission Reliability Standards could be achieved under all possible system demand periods from peak to minimum system load and special days. The financial impact of the additional Dynamic Spinning Reserve that would be

required shall be calculated based upon marginal generation costs to meet the particular Demand.

PC5.2.6 In preparing the annual Generation Development Plan, the Grid Owner shall use appropriate parameters for the existing Generating Plant submitted in accordance with the provisions of this PC and data relating to performance and availability of such plant as continually recorded by the GSO. For any plant, which has as yet not been planned, the Grid Owner shall use typical parameters applicable to such plant in international practice. The list of data to be used in Grid Owner studies in relation to the Generation Reliability Standard is included in Appendix A.

PC5.3 Transmission Adequacy Planning

PC5.3.1 The Grid Owner shall apply the Licence Standards relevant to planning and development, in the planning and development of the Transmission System. Full application of the Licence Standards shall be deemed to provide transmission adequacy for the Transmission System and adequacy of connections to generation and demand at the planning stage by the Grid Owner.

PC5.3.2 The Grid Owner shall report the compliance of the Transmission System with the Licence Standards on an annual basis to the Energy Commission in a Transmission Development Plan. The report shall include transmission expansion plans for new connections and extensions to the Transmission System. It shall also include the compliance status of the transmission system and the reasons for non-compliance in certain cases together with the proposed remedies and timescales for implementation of those remedies by end of August each year.

PC5.3.3 Each User shall also report the compliance of their User Networks with the appropriate Licence Standards and their compatibility at the connection points as well as the adequacy of their connections on an annual basis to the Energy Commission and the Grid Owner by the end of August each year.

PC5.3.4 The compliance reporting to the Energy Commission as part of the Transmission Development Plan shall be in writing on a “by exception” basis, in that only the non-compliant items shall be reported

together with a general statement confirming the compliance of the remainder.

PC5.3.5 Inaccurate or false reporting of compliance shall be deemed to be a serious breach of this Grid Code as it can lead to system failure.

PC6 Connection Planning

PC6.1 Following receipt of an application for connection to the Transmission System the Grid Owner will undertake the necessary studies to enable an offer of connection to be made by the Single Buyer within three (3) months of receipt of the Preliminary Project Data.

PC6.2 The magnitude and complexity of any Transmission System extension or reinforcement will vary according to the nature, location and timing of the proposed User Development which is the subject of the connection application and it may, in the event, be necessary for the Grid Owner to carry out additional more extensive system studies to evaluate more fully the impact of the proposed User Development on the Transmission System. Where in the opinion of the Grid Owner such additional more detailed studies are necessary to ensure the security of the Grid System the connection offer may indicate the areas that require more detailed analysis and before such additional studies are required, the User shall indicate whether it wishes the Grid Owner to undertake the studies necessary to proceed to enable the Single Buyer make a revised offer within the three (3) month period normally allowed or such extended period that the Grid Owner may consider necessary.

PC6.3 To enable the Grid Owner to carry out any of the above mentioned necessary detailed system studies, the User may, at the request of the Grid Owner, be required to provide some or all of the Detailed Planning Data listed in part 2 of the Appendix A immediately after the Preliminary Project Data as indicated in PC7.2 provided that the Grid Owner can reasonably demonstrate that it is relevant and necessary.

PC7 Data Requirements

PC7.0 General

PC7.0.1 It is the responsibility of the User to submit accurate data in relation to its planned developments and the timescales in which these developments will be implemented. The Users also have the responsibility of notifying any changes to their planned developments without waiting for the annual data submission.

PC7.0.2 The Grid Owner shall provide the relevant planning data (as detailed out in Appendix A) as and when finalized to the GSO to the extent these are required for operational planning and scheduling.

PC7.1 User Data

PC7.1.1 The Planning Code, requires two types of data to be supplied by Users:
(1) Standard Planning Data; and
(2) Detailed Planning Data,
The particulars of the Standard Planning Data and Detailed Planning Data are set out in PCA.1.4.

PC7.1.2 The PC considers these two types of data, namely Standard Planning Data and Detailed Planning Data, at three different levels reflecting both progressing levels of accuracy and confidentiality:
(1) Preliminary Project Data,
(2) Committed Project Data; and
(3) Contracted Project Data.
as more particularly described in the following paragraphs.

PC7.1.3 To reflect different types of data, Preliminary Project Data and Committed Project Data are themselves divided into:
(1) those items of Standard Planning Data and Detailed Planning Data which will always be forecast, known as Forecast Data; and
(2) those items of Standard Planning Data and Detailed Planning Data which relate to Plant and/or Apparatus which upon connection will become Registered Data, but which prior to connection, for the ten (10) succeeding years, will be an estimate of what is expected, known as Estimated Registered Data.

Where a User does not supply data within the timescale required under this PC, the Grid Owner may assume appropriate typical parameters, and these will be deemed to be Estimated Registered Data and will be

used in all the planning and operational processes and studies but the responsibility of any consequence of the use of this data lies with the User.

PC7.2 Preliminary Project Data

PC7.2.1 The Planning Data that shall be supplied by a User with an application for connection to or use of the Transmission System shall be considered as Preliminary Project Data until a binding appropriate Agreement is established between the TNB Transmission or the Single Buyer and the User. This data will be treated as confidential by the Grid Owner and shall not be disclosed to another User until it becomes Committed Project Data or Contracted Project Data.

PC7.2.2 Preliminary Project Data will normally only contain the Standard Planning Data unless the Detailed Planning Data is required in advance of the normal timescale to enable the Grid Owner to carry out additional detailed system studies as described in PC6.2.

PC7.2.3 The Grid Owner may disclose the confidential Preliminary Project Data to specialists, experts or consultants it may engage in the course of its system studies only with due confidentiality provisions for such disclosure.

PC7.3 Committed Project Data

PC7.3.1 Once the offer for a relevant Agreement is accepted, the data relating to the User Development already submitted as Preliminary Project Data, and subsequent data required by the Grid Owner under this PC, will become Committed Project Data once it is approved to be adequate by the Grid Owner.

PC7.3.2 This data, together with other data held by the Grid Owner relating to the Grid System will form the background against which new applications by any User will be considered and against which planning of the Grid System will be undertaken. Accordingly, Committed Project Data will not be treated as confidential to the extent that the Grid Owner:

(1) is obliged to use it in the preparation of the System Development Statement and in any further information given pursuant to the System Development Statement;

(2) is obliged to use it when considering and/or advising on applications (or possible applications) of other Users. This use, could include making use of it by giving data from it, both orally and in writing, to other Users making an application or considering or discussing a possible application which is, in the Grid Owner's view, relevant to that other application or possible application;
(3) is obliged to use it for the GSO's operational planning purposes; or
(4) is obliged under the terms of an Interconnection Agreement to pass it on as part of system information on the Grid System.

PC7.4 Contracted Project Data

PC7.4.1 The PC requires that at the time the User indicates his readiness to physically establish the connection, any estimated values assumed for planning purposes are confirmed or, where practical, replaced by validated actual values and by updated estimates for the future and by updated forecasts for forecast data items such as Demand. This data is then termed Contracted Project Data.

PC7.4.2 To reflect the three (3) types of data referred to above, Contracted Project Data is itself divided into:
(1) those items of Standard Planning Data and Detailed Planning Data which will always be forecast data, known as Forecast Data; and
(2) those items of Standard Planning Data and Detailed Planning Data which upon connection become fixed (subject to any subsequent changes), known as Registered Data; and
(3) those items of Standard Planning Data and Detailed Planning Data which for the purposes of the Plant and/or Apparatus concerned as at the date of submission are Registered Data but which for the ten (10) succeeding years will be an estimate of what is expected, known as Estimated Registered Data,

as more particularly provided in the Appendix A.

PC7.4.3 Contracted Project Data, together with other data held by the Grid Owner relating to the Grid System, will form the background against which new applications by any User will be considered and against which planning of the Grid System will be undertaken. Accordingly, Contracted Project Data will not be treated as confidential to the extent that the Grid Owner:
(1) is obliged to use it in the preparation of the System Development Statement and in any further information given pursuant to the System Development Statement;

(2) is obliged to use it when considering and/or advising on applications (or possible applications) of other Users. This use, could include making use of it by giving data from it, both orally and in writing, to other Users making an application or considering or discussing a possible application which is, in Grid Owner's view, relevant to that other application or possible application;
(3) is obliged to use it for the GSO's operational planning purposes; or
(4) is obliged under the terms of an Interconnection Agreement to pass it on as part of system information on the Transmission System.

<End of Planning Code – Main Text>

Planning Code Appendix A

Planning Data Requirements - General

PCA.1.1 Introduction

PCA.1.1.1 This Appendix A of the Planning Code specifies data requirements to be submitted to the Grid Owner by Users and in certain circumstances to Users by the Grid Owner.

PCA.1.2 Planning Data Submissions by Users

PCA.1.2.1 Planning data submissions by Users shall be:

(1) with respect to each of the ten (10) succeeding years (other than in the case of Registered Data which will reflect the current position and data relating to Demand forecasts which relates also to the current year);

(2) provided by Users in connection with a relevant Agreement;

(3) provided by Users on a routine annual basis by September of each year to maintain an up-to-date data bank;

(4) where there is any change (or anticipated change) in Committed Project Data or a significant change in Contracted Project Data in the category of Forecast Data or any change (or anticipated change) in Connected Planning Data in the categories of Registered Data or Estimated Registered Data supplied to the Grid Owner under the PC, the User shall, notify the Grid Owner in writing without delay. The notification of the change will be in the form required under this PC in relation to the supply of that data and will also contain the following information:

(a) the time and date at which the change became, or is expected to become, effective; and

(b) if the change is only temporary, an estimate of the time and date at which the data will revert to the previous registered form.

PCA.1.3 Planning Data Submissions by the Grid Owner

PCA.1.3.1 At the request of the User the Grid Owner shall provide the necessary Planning Data to enable the User to carry out the necessary studies associated with the development of the User Network.

PCA.1.4 Parts of Appendix A

PCA.1.4.1 The data requirements listed in this Appendix are subdivided into the following three (3) parts:

(1) **Part 1 - Standard Planning Data**
This data (as listed in Part 1 of the Appendix) is the first to be provided by a User at the time of an application for a relevant Agreement. It comprises data which is expected normally to be sufficient for the GSO to investigate the impact on the Transmission System of any User Development associated with an application by the User.

(2) **Part 2 - Detailed Planning Data**
This data (as listed in Part 2 of the Appendix) is usually first set of data to be provided by the User within twenty eight (28) days (or such longer period as the GSO may agree in any particular case) of the offer for a relevant Agreement, being accepted by the User. It comprises additional, more detailed, data. Users should note that, although not needed within twenty eight (28) days of the offer, the term Detailed Planning Data also includes Operation Diagrams and Site Common Drawings produced in accordance with the Connection Code.

The User may, however, be required by the GSO to provide the Detailed Planning Data in advance of the normal timescale before the Single Buyer can make an offer for a relevant Agreement, as explained in PC6.2.

(3) **Part 3 – GSO Data**

The data requirements for the GSO in this Appendix are in Part 3 of the Appendix.

PCA.1.5 Forecast Data, Registered Data and Estimated Registered Data

PCA.1.5.1 As explained in PC7.1.3, Planning Data is divided into those items of Standard Planning Data and Detailed Planning Data:

(i) known as Forecast Data;
(ii) known as Registered Data; and
(iii) known as Estimated Registered Data.

PCA.1.5.2 The following paragraphs in this Appendix relate to Forecast Data:

(a) PCA.3.2.2(b), (h), (i) and (j)(part);
(b) PCA.4.2.1;
(c) PCA.4.2.3;
(d) PCA.4.3.1;
(e) PCA.4.3.2;
(f) PCA.4.3.3;
(g) PCA.4.3.4;
(h) PCA.4.3.5;
(i) PCA.4.5(a)(ii) and (b)(ii);
(j) PCA.4.6.1;
(k) PCA.5.2.1; and
(l) PCA.5.2.2.

PCA.1.5.3 The following paragraphs in this Appendix relate to Registered Data and Estimated Registered Data:

(iv) PCA.2.2.1;
(v) PCA.2.2.4;
(vi) PCA.2.2.5;
(vii) PCA.2.2.6;
(viii) PCA.2.3.1;
(ix) PCA.2.4.1;
(x) PCA.3.2.2(a), (c), (d), (e), (f), (g), (j) (part) and (k);
(xi) PCA.3.4.1;
(xii) PCA.3.4.2;
(xiii) PCA.4.5(a)(i), (a)(iii), (b)(i) and (b)(iii);
(xiv) PCA.5.3.1;
(xv) PCA.6.2; and
(xvi) PCA.6.3.

PCA.1.5.4 The data supplied under PCA.3.3.1, although in the nature of Registered Data, is only supplied upon application for a Connection and therefore does not fall to be Registered Data, but is Estimated Registered Data.

PCA.1.5.5 Forecast Data must contain the User's best forecast of the data being forecast, acting as a reasonable and prudent User in all the circumstances.

PCA.1.5.6 Registered Data must contain validated actual values, parameters or other information (as the case may be) which replace the estimated values, parameters or other information (as the case may be) which were given in relation to those data items when they were Preliminary Project Data and Committed Project Data, or in the case of changes, which replace earlier actual values, parameters or other information (as the case may be). Until amended pursuant to the Grid Code, these actual values, parameters or other information (as the case may be) will be the basis upon which the Grid Owner plans and GSO operates the Grid System in accordance with the Grid Code, and on which the GSO therefore relies. In carrying out Scheduling and Dispatch under the Scheduling and Dispatch Codes (SDCs), the GSO will use the data which has been supplied to it under the SDCs and the data supplied under OC2 Outage and Other Related Planning and OC3 Operating Reserve and Response (as provided in those sections of the Grid Code) in relation to Generating Units, but the provision of such data will not alter the data supplied by Users under the PC, which may only be amended as provided in the PC.

PCA.1.5.7 Estimated Registered Data must contain the User's best estimate of the values, parameters or other information (as the case may be), acting as a reasonable and prudent User in all the circumstances.

PCA.1.5.8 Certain data does not need to be supplied in relation to Embedded Power Stations where these are connected at a voltage level below the voltage level directly connected to the Transmission System except in connection with a relevant Agreement, or unless specifically requested by the Grid Owner.

PCA.1.6 Generic Data required by the GSO and Grid Owner for carrying out Studies in relation to Generation Reliability Standard

PCA.1.6.1 The following is a list of the data to be used by the Grid Owner and GSO in carrying out studies in relation to the Generation reliability Standard.

(a) <u>Thermal Unit Data</u>:

1. Plant name;
2. Unit number;
3. Commissioning (date, month, year);
4. Retirement (date, month, year);
5. Type of unit (steam coal/gas/etc., gas turbine, combined cycle, nuclear);
6. Rated/Nameplate capacity (gross & net in MW for main/alternate/standby fuel);
7. Configuration of plant for combined cycle;
8. Maximum available output/dependable capacity/net capacity in MW (for main/alternate/standby fuel);
9. Maximum & minimum generation in MW during emergency;
10. Minimum output in MW under frequency-sensitive mode(for main/alternate/standby fuel);
11. Minimum output in MW without frequency-sensitive mode(for main/alternate/standby fuel);
12. Auxiliary power consumption;
13. Forced outage rate (%);
14. Minimum downtime;
15. Unit heat rate characteristics showing heat rate in mbtu/kWh at different load levels (at maximum, minimum and at 50%, 60%, 70%, 80%, 90% for main/alternate/standby fuel);
16. Fuel data (for main, alternate and standby fuel):
    a. fuel type;
    b. fuel units;
    c. fuel heat content (mbtu/unit);
    d. fuel limits (maximum and minimum per day);
    e. fuel cost (RM/mbtu);
17. Generating Unit maintenance schedule (day, week, year, period of outages & classification);
18. Detail of Fixed O&M cost (RM/kW-month) and detail of Variable O&M cost (RM/MWh);
19. Unit start up and shutdown characteristics- ramp rates, cold/hot/warm start up times and fuel consumption and cost during start up and shutdown;
20. Emission rates for SO_2, NO_2 & CO_2 (% weight of fuel in kTon);
21. Frequency response characteristic of each generation unit;
22. Plants layout showing all essential components;
23. Maximum fuel capacity storage & nominal level of fuel stored;

24. Plants history: efficiency, trippings, planned & unplanned outages;
25. EIA reports including all emission reports.

(b) <u>Hydro Unit Data</u>:

1. Plant name;
2. Unit number;
3. Maximum capacity in MW (rated/ nameplate capacity per unit);
4. Minimum capacity in MW per unit;
5. Commissioning date for each unit;
6. Retirement date for each unit;
7. Type of generation (run-of-river, pondage, pumped storage, etc);
8. Forced outage rate in %;
9. Peak load and energy output schedules (weekly, monthly, annual) and minimum generation;
10. Maintenance outages (day, month, year and period);
11. Daily storage capacity for pumped storage and pondage hydro (level & hours) ;
12. Minimum and maximum reservoir capacity for pumped storage and conventional hydro;
13. Pumping capacity in MW for pumped storage hydro;
14. Detail of Fixed O&M cost and detail of Variable O&M cost in RM/kW-month;
15. Monthly historical inflow energy for last 30 years;
16. Cycle efficiency for pump storage (%);
17. Plant performance characteristics and Rule Curve for the pondage, reparian flow;
18. Detailed EIA reports.

<End of Planning Code- Appendix A – General - Clauses A.1>

Planning Data Requirements – Part 1 – Standard Planning Data

PCA.2 Connection Point and User System Data

PCA.2.1 Introduction

PCA.2.1.1 Each User, whether connected directly via an existing Connection Point to the Transmission System, or seeking such a direct connection, shall provide the Grid Owner and GSO with data on its User System which relates to the Connection Site and/or which may have a system effect on the performance of the Grid System. Such data, current and forecast, is specified in PCA.2.2 to PCA.2.5. In addition each Generator with Embedded Generating Plant shall provide the Grid Owner and GSO with fault infeed data as specified in PCA.2.5.3.

PCA.2.1.2 Each User must reflect the system effect at the Connection Site(s) of any third party Embedded within its User System whether existing or proposed.

PCA.2.1.3 Although not itemised here, each User with existing or proposed Embedded Generating Plant in its User System may, at the Grid Owner and GSO's reasonable discretion, be required to provide additional details relating to the User's System between the Connection Site and the existing or proposed Embedded Generating Plant.

PCA.2.1.4 At the Grid Owner and GSO's reasonable request, additional data on the User's System will need to be supplied. Some of the possible reasons for such a request, and the data required, are given in PCA.6.2, PCA.6.4, PCA.6.5 and PCA.6.6.

PCA.2.2 User's System Layout

PCA.2.2.1 Each User shall provide a Single Line Diagram, depicting both its existing and proposed system arrangement(s) of load current carrying Apparatus relating to both existing and proposed Connection Points and the numbering and nomenclature.

PCA.2.2.2 The Single Line Diagram must include all parts of the User System operating at 500 and 275kV and 132kV, and those parts of its Subtransmission System at any TNB Site. In addition, the Single Line Diagram must include all parts of the User's Subtransmission System operating at a voltage greater than 50kV which, under either intact network or Planned Outage conditions:-

(a) connects Embedded Generating Plant, or Embedded Small Generating Plant connected to the User's Subtransmission System, to a Connection Point; or

(b) connects Embedded Generating Plant, or Embedded Small Generating Plant connected to the User's Subtransmission System, to a Connection Point.

At the User's discretion, the Single Line Diagram can also contain additional details of the User's Subtransmission System not already included above, and also details of the transformers connecting the User's Subtransmission System to a lower voltage. With Grid Owner and GSO's agreement, the Single Line Diagram can also contain information about the User's System at a voltage below the voltage of the Subtransmission System.

The Single Line Diagram must include the points at which Demand data (provided under PCA.4.3.4) and fault infeed data (provided under PCA.2.5) are supplied.

PCA.2.2.3 The above mentioned Single Line Diagram shall include:

(a) electrical circuitry (ie. overhead lines, identifying which circuits are on the same towers, underground cables, power transformers, reactive compensation equipment and other similar equipment) and tower geometry; and

(b) substation names (in full and abbreviated form) with operating voltages.

PCA.2.2.4 In addition, for all load current carrying Apparatus operating at 500kV and 275kV and 132kV, the Single Line Diagram shall include:

(a) circuit breakers; and

(b) phasing arrangements.

PCA.2.2.5 For the avoidance of doubt, the Single Line Diagram to be supplied is in addition to the Operation Diagram supplied pursuant to Connection Code.

PCA.2.2.6 For each circuit shown on the Single Line Diagram provided under PCA.2.2.1, each User shall provide the following details relating to that part of its User System:

Circuit Parameters:

- Rated voltage (kV)
- Operating voltage (kV)
- Length of circuit (km)
- Positive phase sequence reactance
- Positive phase sequence resistance
- Positive phase sequence susceptance
- Zero phase sequence reactance (both self and mutual)
- Zero phase sequence resistance (both self and mutual)
- Zero phase sequence susceptance (both self and mutual)

PCA.2.2.7 For each transformer shown on the Single Line Diagram provided under PCA.2.2.1, each User shall provide the following details:

- Rated MVA
- Voltage Ratio
- Winding arrangement
- Positive sequence reactance (at max, min and nominal tap)
- Positive sequence resistance (at max, min and nominal tap)
- Zero sequence reactance.

PCA.2.2.8 In addition, for all interconnecting transformers between the User's 500kV and 275kV System and 132kV) and the User's Subtransmission System the User shall supply the following information:

- Tap changer range
- Tap change step size
- Tap changer type: on load or off circuit
- Earthing method and value: Direct, resistance or reactance
- Impedance (if not directly earthed)
- Vector group.

PCA.2.2.9 Each User shall supply the following information about the User's equipment installed at a Connection Site which is owned, operated or managed by TNB Transmission:

(a) Switchgear. For all circuit breakers:

- Rated voltage (kV)
- Operating voltage (kV)
- Rated 3-phase rms short-circuit breaking current, (kA)

- Rated 1-phase rms short-circuit breaking current, (kA)
- Rated 3-phase peak short-circuit making current, (kA)
- Rated 1-phase peak short-circuit making current, (kA)
- Rated rms continuous current (A)
- DC time constant applied at testing of asymmetrical breaking abilities (secs)

(b) Substation Infrastructure. For the substation infrastructure (including, but not limited to, switch disconnectors, disconnectors, current transformers, line traps, busbars, through bushings, etc):-

- Rated 3-phase rms short-circuit withstand current (kA)
- Rated 1-phase rms short-circuit withstand current (kA).
- Rated 3-phase short-circuit peak withstand current (kA)
- Rated 1- phase short-circuit peak withstand current (kA)
- Rated duration of short circuit withstand (secs)
- Rated rms continuous current (A)

A single value for the entire substation may be supplied, provided it represents the most restrictive item of current carrying apparatus.

PCA.2.3 Lumped System Susceptance

PCA.2.3.1 For all parts of the User's Subtransmission System which are not included in the Single Line Diagram provided under PCA.2.2.1, each User shall provide the equivalent lumped shunt susceptance at nominal Frequency.

PCA.2.3.2 This should include shunt reactors connected to cables which are not normally in or out of service independent of the cable (ie. they are regarded as part of the cable).

PCA.2.3.3 This should not include:

(a) independently switched reactive compensation equipment connected to the User's System specified under PCA.2.4; or

(b) any susceptance of the User's System inherent in the Demand (Reactive Power) data specified under PCA.4.3.1.

PCA.2.4 Reactive Compensation Equipment

PCA.2.4.1 For all independently switched reactive compensation equipment, including that shown on the Single Line Diagram, not owned by TNB Transmission and connected to the User's System at 132kV and above, other than power factor correction equipment associated directly with Customers' Plant and Apparatus, the following information is required:

(a) type of equipment (e.g. fixed or variable);

(b) capacitive and/or inductive rating or its operating range in MVAr;

(c) details of any automatic control logic to enable operating characteristics to be determined; and

(d) the point of connection to the User's System in terms of electrical location and System voltage.

PCA.2.5 Short Circuit Contribution to the Transmission System

PCA.2.5.1 General

PCA.2.5.1.1 The following are some general requirements:

(a) In order to enable the Grid Owner and GSO to calculate fault currents, each User is required to provide data, calculated in accordance with Prudent Industry Practice, as set out in the following paragraphs of PCA.2.5.

(b) The data should be provided for the User's System with all Generating Units synchronised to that User's System. The User must ensure that the pre-fault network conditions reflect a credible system operating arrangement.

(c) The list of data items required, in whole or part, under the following provisions, is set out in PCA.2.5.4. Each of the relevant following provisions identifies which data items in the list are required for the situation with which that provision deals.

The fault currents in sub-paragraphs (a) and (b) of the data list in PCA.2.5.4 should be based on an AC load flow that takes into account any pre-fault current flow across the Connection Point being considered.

Measurements made under appropriate system conditions may be used by the User to obtain the relevant data.

(d) GSO may at any time, in writing, specifically request for data to be provided for an alternative System condition, for example minimum plant, and the User will, insofar as such request is reasonable, provide the information as soon as reasonably practicable following the request.

PCA.2.5.1.2 Network Operators and Directly Connected Customers are required to submit data in accordance with PCA.2.5.2. Generators are required to submit data in accordance with PCA.2.5.3.

PCA.2.5.1.3 Where prospective short-circuit currents on equipment owned, operated or managed by the Grid Owner and close to the equipment rating, and in the Grid Owner and GSO's reasonable opinion more accurate calculations of the prospective short circuit currents are required, then the Grid Owner and GSO will request additional data as outlined in PCA.6.6 below.

PCA.2.5.2 Data from Network Operators and Directly Connected Customers

PCA.2.5.2.1 Data is required to be provided at each node on the Single Line Diagram provided under PCA.2.2.1 at which motor loads and/or Embedded Generating Unit(s) are connected, assuming a fault at that location, as follows:

The data items listed under the following parts of PCA.2.5.4:-

(a) (i), (ii), (iii), (iv), (v) and (vi);

and the data items shall be provided in accordance with the detailed provisions of PCA.2.5.4(c) - (f).

PCA.2.5.3 Data from Generators

PCA.2.5.3.1 For each Generating Unit with one or more associated Unit Transformers, the Generator is required to provide values for the contribution of the Power Station Auxiliaries (including Auxiliary Gas Turbines or Auxiliary Diesel Engines) to the fault current flowing through the Unit Transformer(s).

The data items listed under the following parts of PCA.2.5.4 (a) should be provided:-

(i), (ii) and (v);

(iii) if the associated Generating Unit step-up transformer can supply zero phase sequence current from the Generating

Unit side to the TNB Transmission System (Grid System);

(iv) if the value is not 1.0 p.u;

and the data items shall be provided in accordance with the detailed provisions of PCA.2.5.4(c) - (f), and with the following parts of this PCA.2.5.3.

PCA.2.5.3.2 Auxiliary motor short circuit current contribution and any Auxiliary Gas Turbine Unit contribution through the Unit Transformers must be represented as a combined short circuit current contribution at the Generating Unit's terminals, assuming a fault at that location.

PCA.2.5.3.3 If the Power Station has separate Station Transformers, data should be provided for the fault current contribution from each transformer at its high voltage terminals, assuming a fault at that location, as follows:

The data items listed under the following parts of PCA.2.5.4

(a) (i), (ii), (iii), (iv), (v) and (vi);

and the data items shall be provided in accordance with the detailed provisions of PCA.2.5.4(b) - (f).

PCA.2.5.3.4 Data for the fault infeeds through both Unit Transformers and Station Transformers shall be provided for the normal running arrangement when maximum Generating Plant is Synchronised to the System. Where there is an alternative running arrangement which can give a higher fault infeed through the Station Transformers, then a separate data submission representing this condition shall be made.

PCA.2.5.3.5 Unless the normal operating arrangement within the Power Station is to have the Station and Unit Boards interconnected within the Power Station, no account should be taken of the interconnection between the Station Board and the Unit Board.

PCA.2.5.4 Data Items

(a) The following is the list of data utilised in this part of the PC It also contains rules on the data which generally apply:

(i) Root mean square of the symmetrical three-phase short circuit current infeed at the instant of fault, (I_1");

(ii) Root mean square of the symmetrical three-phase short circuit current after the subtransient fault current contribution has substantially decayed, (I_1');

(iii) the zero sequence source resistance and reactance values of the User's System as seen from the node on the Single

Line Diagram provided under PCA.2.2.1 (or Station Transformer high voltage terminals or Generating Unit terminals, as appropriate) consistent with the infeed described in PCA.2.5.1.1(b);

(iv) root mean square of the pre-fault voltage at which the maximum fault currents were calculated;

(v) the positive sequence X/R ratio at the instant of fault;

(vi) the negative sequence resistance and reactance values of the User's System seen from the node on the Single Line Diagram provided under PCA.2.2.1 (or Station Transformer high voltage terminals, or Generating Unit terminals if appropriate) if substantially different from the values of positive sequence resistance and reactance which would be derived from the data provided above.

(b) In considering this data, unless the User notifies the Grid Owner and GSO accordingly at the time of data submission, the Grid Owner and GSO will assume that the time constant of decay of the subtransient fault current corresponding to the change from I_1'' to I_1', (T") is not significantly different from 40ms. If that assumption is not correct in relation to an item of data, the User must inform the Grid Owner and GSO at the time of submission of the data.

(c) The value for the X/R ratio must reflect the rate of decay of the DC component that may be present in the fault current and hence that of the sources of the initial fault current. All shunt elements and loads must therefore be deleted from any system model before the X/R ratio is calculated.

(d) In producing the data, the User may use "time step analysis" or "fixed-point-in-time analysis" with different impedances.

(e) If a fixed-point-in-time analysis with different impedances method is used, then in relation to the data submitted under (a) (i) above, the data will be required for "time zero" to give I_1''. The figure of 120ms is consistent with a decay time constant T" of 40ms, and if that figure is different, then the figure of 120ms must be changed accordingly.

(f) Where a "time step analysis" is carried out, the X/R ratio may be calculated directly from the rate of decay of the DC component. The X/R ratio is not that given by the phase angle of the fault current if this is based on a system calculation with shunt loads, but from the Thévenin equivalent of the system impedance at the instant of fault with all non-source shunts removed.

PCA.3 Generating Unit Data

PCA.3.1 Introduction

PCA.3.1.0 General

PCA.3.1.0.1 This part of the appendix provides details of the data required on generating unit classified as directly connected or embedded generating units.

PCA.3.1.1 Directly Connected Generating Units

PCA.3.1.1.1 Each Generator with existing, or proposed, Generating Plant directly connected, or to be directly connected, to the Transmission System, shall provide the Grid Owner and GSO with data relating to that Generating Plant and/or Small Generating Plant, both current and forecast, as specified in PCA.3.2 to PCA.3.4.

PCA.3.1.2 Embedded Generating Units

PCA.3.1.2.1 (a) Subject to PCA.3.1.2.1(b), each Generator with existing, or proposed, Embedded Generating Plant, and/or Embedded Small Generating Plant, shall provide the Grid Owner and GSO with data relating to that Generating Plant and/or Small Generating Plant, both current and forecast, as specified in PCA.3.2 to PCA.3.4 (but excluding PCA.3.2.2(i) unless specifically requested by the Grid Owner and GSO).

(b) No data need be supplied in relation to Small Generating Plant, if it is connected to a User System at a voltage level below that of the Transmission System except:-

(i) in connection with an application for, or under, a relevant Agreement, or

(ii) unless specifically requested by the Grid Owner and GSO under PCA.3.1.2.3.

PCA.3.1.2.2 (a) Each Network Operator) shall provide the Grid Owner and GSO with the data specified in PCA.3.2.2(c).

(b) Network Operators need not submit planning data in respect of Embedded Minor Generating Plant, apart from the contract location details of PCA.3.2.2(j), unless required to do so under PCA.1.2.1(2) or unless specifically requested under PCA.3.1.2.3 below, in which case they will supply such data.

PCA.3.1.2.3 (a) PCA.4.2.3(b) and PCA.4.3.2(a) explain that the forecast Demand submitted by each Distributor or Network Operator must be net of the output of all Generating Plant and Customer Generating Plant Embedded in that Network Operator's System. The Distributor or Network Operator must inform the Grid Owner and GSO of the number of such Embedded Power Stations (including the number of Generating Units) together with their summated capacity.

(b) On receipt of this data, the Distributor or Network Operator or Generator (if the data relates to Power Stations referred to in PCA.3.1.2.1) may be further required, at the Grid Owner and GSO's reasonable request, to provide details of Embedded Generating Plant and Customer Generating Plant, both current and forecast, as specified in PCA.3.2 to PCA.3.4. Such requirement would arise where the Grid Owner and GSO reasonably considers that the collective effect of a number of such Embedded Generating Plants and Customer Generating Plants may have a significant system effect on the Transmission System.

PCA.3.1.2.4 Where Generating Units, are connected to the Transmission System via a busbar arrangement which is or is expected to be operated in separate sections, the section of busbar to which each Generating Unit is connected is to be identified in the submission.

PCA.3.2 Output Data

PCA.3.2.1

(a) **Generating Plant**.

Data items PCA.3.2.2 (a), (b), (c), (d), (e), (f), (h), (i) and (k) are required with respect to each Generating Unit of each Generating Plant (although (a) and (k) are not required for CCGT Units and (b), (d) and (e) are not normally required for CCGT Units).

(b) **CCGT Units/Modules**.

(i) data item PCA.3.2.2 (g) is required with respect to each CCGT Unit;

(ii) data items PCA.3.2.2 (a), (j) and (k) are required with respect to each CCGT Module; and

(iii) data items PCA.3.2.2 (b), (c), (d) and (e) are required with respect to each CCGT Module unless the Grid

Owner and GSO informs the relevant User in advance of the submission that it needs the data items with respect to each CCGT Unit for particular studies, in which case it must be supplied on a CCGT Unit basis

Where any definition utilised or referred to in relation to any of the data items does not reflect CCGT Units, such definition shall be deemed to relate to CCGT Units for the purposes of these data items. Any Schedule in the Data Registration Code (DRC) which refers to these data items shall be interpreted to incorporate the CCGT Unit basis where appropriate;

PCA.3.2.2 Items (a), (b), (d), (e), (f), (g), (h), (i), (j) and (k) are to be supplied by each Generator or Network Operator (as the case may be) in accordance with PCA.3.1.1 and PCA.3.1.2. Item (c) is to be supplied by each Network Operator in all cases:-

(a) Registered Capacity (MW);

(b) Output Usable (MW) on a monthly basis;

(c) System Constrained Capacity (MW) i.e. any constraint placed on the capacity of the Embedded Generating Unit due to the Network Operator's System in which it is embedded. Where Generating Units (which term includes CCGT Units) are connected to a Network Operator's System via a busbar arrangement which is or is expected to be operated in separate sections, details of busbar running arrangements and connected circuits at the substation to which the Embedded Generating Unit is connected sufficient for the Grid Owner and GSO to determine where the MW generated by each Generating Unit at that Power Station would appear onto the Transmission System;

(d) Minimum Stable Generation (MW);

(e) MW obtainable from Generating Units in excess of Registered Capacity;

(f) Generator Performance Chart at the Generating Unit stator terminals;

(g) a list of the CCGT Units within a CCGT Module, identifying each CCGT Unit, and the CCGT Module of which it forms part, unambiguously. In the case of a Range CCGT Module, details of the possible configurations should also be submitted, together:

(i) in the case of a Range CCGT Module connected to the Transmission System with details of the single Grid Entry Point (there can only be one) at which power is provided from the Range CCGT Module; or

(ii) in the case of an Embedded Range CCGT Module) with details of the single User System Entry Point (there can only be one) at which power is provided from the Range CCGT Module

Provided that, nothing in this sub-paragraph (g) shall prevent the busbar at the relevant point being operated in separate sections;

(h) expected running regime(s) at each Power Station and type of Generating Unit, eg. Steam Unit, Gas Turbine Unit, Combined Cycle Gas Turbine Unit, Novel Units (specify by type), etc;

(i) forecast output profile (Active Power) for Generating Plant directly connected to the Transmission System or where such a connection is proposed. Such profile is required in respect of each Connection Point for:

(i) peak day Demand at the Connection Point;

(ii) minimum day Demand at the Connection Point; and

(iii) typical weekday and Saturday and Sunday Demand at the Connection Point for each month of each year,

and in the case of Generating Plant whose output can be expected to vary in a random manner (eg. wind power) or according to some other pattern (eg. tidal power) sufficient information is required to enable an understanding of the possible profile.

As explained under PCA.3.1.2, this information is not required in respect of Embedded Generating Plant and Customer Generating Plant unless specifically requested by the Grid Owner and GSO;

(j) In cases where a contract has been entered into or is proposed which makes use of an External Interconnection with an Externally Interconnected Party, the External Interconnection should be named together with the contracted electricity flow in terms of MW;

(k) If the Generating Unit (other than a CCGT Unit) or the CCGT Module, as the case may be, is not by the terms of the Licence governing that Generating Unit (other than a CCGT Unit) or the CCGT Module, as the case may be, required to be subject to Central Dispatch, whether the Generator will wish to agree with TNB for the Generating Unit (other than a CCGT Unit) or the CCGT Module, as the case may be, to be subject to Central Dispatch, or wish it to continue to be so .

PCA.3.2.3 Notwithstanding any other provision of this PC, the CCGT Units within a CCGT Module, details of which are required under paragraph

(g) of PCA.3.2.2, can only be amended in accordance with the following provisions:

(a) if the CCGT Module is a Normal CCGT Module, the CCGT Units within that CCGT Module can only be amended such that the CCGT Module comprises different CCGT Units if TNB gives its prior consent in writing. Notice of the wish to amend the CCGT Units within such a CCGT Module must be given at least six (6) months before it is wished for the amendment to take effect; or

(b) if the CCGT Module is a Range CCGT Module, the CCGT Units within that CCGT Module can only be amended such that the CCGT Module comprises different CCGT Units for a particular Schedule Day if the relevant notification is given by 10:00 hours on the day prior to the Schedule Day in which the amendment is to take effect. No subsequent amendment may be made to the CCGT Units comprising the CCGT Module in respect of that particular Schedule Day.

PCA.3.2.4 Notwithstanding any other provision of this PC, in the case of a Range CCGT Module, the Grid Entry Point at which the power is provided from the Range CCGT Module can only be changed to another Grid Entry Point if the Grid Owner and GSO gives its prior consent in writing, such consent not to be unreasonably withheld. A request to amend the Grid Entry Point must be made in accordance with SDC1.4.2.4 by 10:00 hours on the day before the Schedule Day from the beginning of which it is wished to change the Grid Entry Point.

PCA.3.3 Rated Parameters Data

PCA.3.3.1 The following information is required to facilitate an early assessment, by the Grid Owner and GSO, of the need for more detailed studies;

(a) for all Generating Units;

- Rated MVA
- Rated MW
- Direct axis transient reactance;
- Short circuit ratio
- Direct axis synchronous reactance
- Direct axis transient reactance
- Direct axis sub-transient reactance
- Direct axis short-circuit transient time constant
- Direct axis short-circuit sub-transient time constant

- Quadrature axis synchronous reactance
- Quadrature axis sub-transient reactance
- Quadrature axis short-circuit sub-transient time constant
- Stator time constant
- Stator leakage reactance
- Armature winding direct-current resistance.
- Inertia constant (for whole machine), MWsecs/MVA.

(b) for each Generating Unit step-up transformer:

- Rated MVA
- Positive sequence reactance (at max, min and nominal tap).

This information should only be given in the data supplied with the application for a relevant Agreement.

PCA.3.4 General Generating Unit Data

PCA.3.4.1 The point of connection to the Transmission System or the Total System, if other than to the Transmission System, in terms of geographical and electrical location and system voltage is also required.

PCA.3.4.2 Details of the Generating Unit excitation system, including:

(a) details of the Exciter category, for example, whether it is a rotating Exciter or a static Exciter; and

(b) whether a Power System Stabiliser is fitted.

PCA.4 Demand and Active Energy Data

PCA.4.1 Introduction

PCA.4.1.1 Each User directly connected to the Transmission System with Demand shall provide the Grid Owner and GSO with the Demand data, historic, current and forecast, as specified in PCA.4.2, PCA.4.3 and PCA.4.5. Paragraphs PCA.4.1.2 to PCA.4.1.5 apply equally to Active Energy requirements as to Demand unless the context otherwise requires.

PCA.4.1.2 Data will need to be supplied by:

(a) each Distributor or Network Operator, in relation to Demand and Active Energy requirements on its User System; or

(b) each Non-Embedded Customer (including Pumped Storage Generators with respect to Pumping Demand) in relation to its Demand and Active Energy requirements.

Demand of Power Stations directly connected to the Transmission System is to be supplied by the Generator under PCA.5.2.

PCA.4.1.3 References in this PC to data being supplied on a half hourly basis refer to it being supplied for each period of thirty (30) minutes ending on the hour or half-hour in each hour.

PCA.4.1.4 (a) The data to be supplied by each Distributor or Network Operator will include, if any exists, Demand being (or to be) met by other Distributor or Network Operator supplying Customers in the User System together with Active Energy requirements relating thereto;

(b) Accordingly, if a Distributor or Network Operator receives forecast data from another Distributor or Network Operator and intends to use that data in preparing data to be supplied to the Grid Owner and GSO, each Distributor or Network Operator must ensure that the Demand and Active Energy requirements forecasts provided by those Distributors or Network Operators are prepared in accordance with Prudent Industry Practice.

PCA.4.1.5 (a) In assembling its Demand and Active Energy requirements forecast, each Distributor or Network Operator must endeavour to avoid duplication between the Demand together

with Active Energy requirements relating thereto being and to be met by each of the Distributors or Network Operators supplying Customers in the User System;

(b) Therefore, in formulating its Demand and Active Energy requirements forecast, each Distributor or Network Operator will only include in the Demand it expects to be met together with Active Energy requirements relating thereto:-.

(i) that Demand together with Active Energy requirements relating thereto in respect of which there is a contractual arrangement to meet (whether or not that Demand and those Active Energy requirements exist at the date of the forecast);

(ii) any anticipated development in Demand and Active Energy requirements relating to that contractual arrangement

(iii) any anticipated development in Demand and Active Energy requirements relating to Customers generally (whether or not a contractual arrangement then exists); and

(iv) where a contractual arrangement exists, or where a person is anticipated to be a Customer, for only a portion of the period for which data is required, will include an assumption for the remainder of that period (which will be identified as an assumption in the data submission) unless it is aware that that Demand will be met by other Users acting as Suppliers, which will be reflected in any event in its Demand and Active energy requirements forecast.

The Demand and Active Energy requirements forecast may include specific reservations on particular aspects of the forecast.

PCA.4.2 Demand (Active and Reactive Power) and Active Energy Data

PCA.4.2.1 User's Total System Demand (Active Power) and Active Energy

Forecast daily Demand (Active Power) profiles, as specified in (a), (b) and (c) below, in respect of each of the User Systems (each summated over all Grid Supply Points in each User System) are required for:

(a) peak day on each of the User Systems (as determined by the User) giving the numerical value of the maximum Demand

(Active Power) that in the Users' opinion could reasonably be imposed on the Transmission System;

(b) day of peak Demand (Active Power) as notified by the Grid Owner and GSO pursuant to PCA.4.2.2;

(c) day of minimum Demand (Active Power) as notified by the Grid Owner and GSO pursuant to PCA.4.2.2; and

(d) annual Active Energy requirement for each of the User Systems subdivided into the following categories of Customer:

- Domestic,
- Commercial,
- Industrial,
- Public Lighting,
- Mining and
- User System losses.

PCA.4.2.2 No later than end of September each year the Grid Owner and GSO shall notify each Distributor or Network Operator and Directly Connected Customer in writing of the following, for the current year and for each of the following ten (10) year, which will, until replaced by the following year's notification, be regarded as the relevant specified days and times under PCA.4.2.1:

(a) the date and time of the annual peak Demand; and

(b) the date and time of the annual minimum Demand.

PCA.4.2.3 All forecast Demand (Active Power) and Active Energy specified in PCA.4.2.1 shall:

(a) be such that the profiles comprise average Active Power levels in 'MW' for each time marked half hour throughout the day;

(b) in the case of PCA.4.2.1(a), (b) and (c), be that remaining after any deductions reasonably considered appropriate by the User to take account of the output profile of all Embedded Generating Plant and Customer Generating Plant; or

(c) in the case of PCA.4.2.1(a) and (b), be based on Peak Demand Conditions and in the case of PCA.4.2.1(c) and the details of the annual Active Energy required under PCA.4.2.1 be based on Average Conditions.

PCA.4.3 Connection Point Demand (Active and Reactive Power)

PCA.4.3.1 Forecast Demand (Active Power) and Power Factor (values of the Power Factor at maximum and minimum continuous excitation may be given instead where more than 95% of the total Demand at a Connection Point is taken by synchronous motors) to be met at each are required for:

(a) the time of the maximum Demand (Active Power) at the Connection Point (as determined by the User) that in the User's opinion could reasonably be imposed on the Transmission System;

(b) the time of peak Demand as provided by the Grid Owner and GSO under PCA.4.2.2; and

(c) the time of minimum Demand as provided by the Grid Owner and GSO under PCA.4.2.2.

PCA.4.3.2 All forecast Demand specified in PCA.4.3.1 shall:

(a) be that remaining after any deductions reasonably considered appropriate by the User to take account of the output of all Embedded Generating Plant and Customer Generating Plant and such deductions should be separately stated;

(b) include any User's System series reactive losses but exclude any reactive compensation equipment specified in PCA.2.4 and exclude any network susceptance specified in PCA.2.3; and

(c) in the case of PCA.4.3.1(a) and (b) be based on Peak Demand Conditions and in the case of PCA.4.3.1(c) be based on Average Conditions.

PCA.4.3.3 Where two or more Connection Points normally run in parallel with the Transmission System under intact network conditions, and a Single Line Diagram of the interconnection has been provided under PCA.2.2.2, the User may provide a single submission covering the aggregate Demand for all such Connection Points.

PCA.4.3.4 Each Single Line Diagram provided under PCA.2.2.2 shall include the Demand (Active Power) and Power Factor (values of the Power Factor at maximum and minimum continuous excitation may be given instead where more than 95% of the Demand is taken by synchronous motors) at the time of the peak Demand (as provided under PCA.4.2.2) as well as at minimum Demand at each node on the Single Line Diagram. These Demands shall be consistent with those provided under PCA.4.3.1 (b) above for the relevant year.

PCA.4.3.5 In order that the Grid Owner and GSO is able to assess the impact on the Transmission System of the diversified Demand at various periods throughout the year, each User may be required to provide additional forecast Demand data as specified in PCA.4.3.1 and PCA.4.3.2 but with respect to times to be specified by the Grid Owner and GSO. However, the Grid Owner and GSO shall not make such a request for additional data more than once in any calendar year.

PCA.4.3.6 The Grid Owner and GSO will assemble and derive in a reasonable manner, the forecast information supplied to it under PCA.4.2.1, PCA.4.3.1, and PCA.4.3.4 above into a cohesive forecast and will use this in preparing Forecast Demand information in the System Development Statement and for use in the GSO's Operational Planning. If any User believes that the cohesive forecast Demand information in the System Development Statement does not reflect its assumptions on Demand, it should contact the Grid Owner and GSO to explain its concerns and may require the Grid Owner and GSO, on reasonable request, to discuss these forecasts. In the absence of such expressions, the Grid Owner and GSO will assume that Users concur with the Grid Owner and GSO's cohesive forecast.

PCA.4.4 Demand Transfer Capability

PCA.4.4.1 Where a User's Demand or group of Demands (Active and Reactive Power) may be offered by the User to be supplied from alternative Connection Point(s), (either through non-TNB Transmission interconnections or through Demand transfer facilities) and the User reasonably considers it appropriate that this should be taken into account (by the Grid Owner and GSO) in planning the connections at the Connection Site the following information is required:

(a) First Circuit (Fault) Outage Conditions
  - (i) the alternative Connection Point(s);
  - (ii) the Demand (Active and Reactive Power) which may be transferred under the loss of the most critical circuit from or to each alternative Connection Point (to the nearest 5MW/5MVAr);
  - (iii) the arrangements (e.g., manual or automatic) for transfer together with the time required to affect the transfer.

(b) Second Circuit (Planned) Outage Conditions
  - (i) the alternative Connection Point(s);
  - (ii) the Demand (Active and Reactive Power) which may be transferred under the loss of the most critical circuit from or to each alternative Connection Point (to the nearest 5MW/5MVAr);
  - (iii) the arrangements (e.g., manual or automatic) for transfer together with the time required to affect the transfer.

PCA.4.5 General Demand Data

PCA.4.5.1 The following information is infrequently required and should be supplied (wherever possible) when requested by the Grid Owner and GSO:

(a) details of any individual loads which have characteristics significantly different from the typical range of Domestic, Commercial or Industrial loads supplied;

(b) the sensitivity of the Demand (Active and Reactive Power) to variations in voltage and Frequency on the Transmission System at the time of the peak Demand (Active Power). The sensitivity factors quoted for the Demand (Reactive Power) should relate to that given under PCA.4.3.1 and, therefore, include any User's System series reactive losses but exclude

any reactive compensation equipment specified in PCA.2.4 and exclude any network susceptance specified in PCA.2.3;

(c) details of any traction loads, e.g. connection phase pairs and continuous load variation with time;

(d) the average and maximum phase unbalance, in magnitude and phase angle, which the User would expect its Demand to impose on the Transmission System;

(e) the maximum harmonic content which the User would expect its Demand to impose on the Transmission System;

(f) details of all loads which may cause Demand fluctuations greater than those permitted under Engineering Recommendation P28, Stage 1 at a Point of Common Coupling including the Flicker Severity (Short Term) and the Flicker Severity (Long Term).

PCA.4.5.2 The following details are required in respect of any fluctuating loads in excess of 1MVA:

(i) Details of cyclic variation of Demand (Active and Reactive Power);

(ii) the rates of change of Demand (Active and Reactive Power) both for increasing and decreasing Demand;

(iii) the shortest repetitive time interval between fluctuations in Demand (Active and Reactive Power);

(iv) the magnitude of largest step changes in Demand (Active and Reactive Power) both for increasing and decreasing Demand;

(v) maximum Energy demanded per hour by the fluctuating Demand cycle; and

(vi) steady state residual Demand (Active and Reactive Power) occurring between Demand fluctuations.

<End of Planning Code - Appendix A - Part 1- Standard Planning Data>

Planning Data Requirements – Part 2 – Detailed Planning Data

PCA.5 Generating Unit Data

PCA.5.1 Introduction

PCA.5.1.1 Directly Connected

PCA.5.1.1.1 Each Generator, with existing or proposed Generating Plant directly connected, or to be directly connected, to the Transmission System, shall provide the Grid Owner and GSO with data relating to that Plant and Apparatus, both current and forecast, as specified in PCA.5.2 and PCA.5.3.

PCA.5.1.2 Embedded Generating Plant

PCA.5.1.2.1 Each Generator, with existing or proposed Embedded Generating Plant and Embedded Small Generating Plant shall provide the Grid Owner and GSO with data relating to that Generating Plant and/or Small Generating Plant, both current and forecast, as specified in PCA.5.2 and PCA.5.3. However, no data needs be supplied in relation to that Embedded Small Generating Plant if it is connected to the User System at a voltage level below the voltage level directly connected to the Transmission System except in connection with an application for, or under a relevant Agreement or unless specifically requested by the Grid Owner and GSO under PCA.5.1.2.3.

PCA.5.1.2.2 Each Distributor or Network Operator need not submit Planning Data in respect of Embedded Minor Generating Plant unless required to do so under PCA.1.2.1(2) or unless specifically requested under PCA.5.1.2.3 below, in which case they will supply such data.

PCA.5.1.2.3 PCA.4.2.3(b) and PCA.4.3.2(a) explained that the forecast Demand submitted by each Distributor or Network Operator must be net of the output of all Generating Plant and Customer Generating Plant, Embedded in that User's System. In such cases (PCA.3.1.2.3 also refers), the Distributor or Network Operator must inform the Grid Owner and GSO of the number of such Power Stations (including the number of Generating Units) together with their summated capacity. On receipt of this data, the Distributor or Network Operator or Generator (if the data relates to Power Stations referred to in PCA.5.1.2.1) may be further required at the Grid Owner and GSO's

request to provide details of Embedded Generating Plant and Customer Generating Plant, both current and forecast, as specified in PCA.5.2 and PCA.5.3. Such requirement would arise when the Grid Owner and GSO reasonably considers that the collective effect of a number of such Embedded Generating Plants and Customer Generating Plants may have a significant system effect on the Transmission System.

PCA.5.2 Demand

PCA.5.2.1 For each Generating Unit which has an associated Unit Transformer, the value of the Demand supplied through this Unit Transformer when the Generating Unit is at Rated MW output is to be provided.

PCA.5.2.2 Where the Power Station has associated Demand additional to the unit-supplied Demand of PCA.5.2.1 which is supplied from either the Transmission System or the Generator's System the Generator shall supply forecasts for each Power Station of:

a) the maximum Demand that, in the Generator's opinion, could reasonably be imposed on the Transmission System or the Generator's System as appropriate;
b) the Demand at the time of the peak Demand; and
c) the Demand at the time of minimum Demand.

PCA.5.2.3 At its discretion, the Grid Owner and GSO may also request further details of the Demand as specified in PCA.4.5.

PCA.5.3 Synchronous Machine and Associated Control System Data

PCA.5.3.1 The following Generating Unit and Power Station data should be supplied:

(a) Generating Unit Parameters

- Rated terminal volts (kV)
- Rated MVA
- Rated MW
- Minimum Stable Generation MW
- Short circuit ratio
- Direct axis unsaturated synchronous reactance
- Direct axis unsaturated transient reactance
- Direct axis unsaturated sub-transient reactance
- Direct axis unsaturated short-circuit transient time constant
- Direct axis unsaturated short-circuit sub-transient time constant
- Quadrature axis unsaturated synchronous reactance
- Quadrature axis unsaturated sub-transient reactance
- Quadrature axis unsaturated short-circuit sub-transient time constant
- Stator time constant
- Stator leakage reactance
- Armature winding direct-current resistance.
- Turbogenerator inertia constant (MWsec/MVA)
- Rated field current (amps) at Rated MW and MVAr output and at rated terminal voltage.
- Field current (amps) open circuit saturation curve for Generating Unit terminal voltages ranging from 50% to 120% of rated value in 10% steps as derived from appropriate manufacturers test certificates.

(b) Parameters for Generating Unit Step-up Transformers

- Rated MVA
- Voltage ratio
- Positive sequence reactance (at max, min, & nominal tap)
- Positive sequence resistance (at max, min, & nominal tap)
- Zero phase sequence reactance
- Tap changer range
- Tap changer step size

- Tap changer type: on load or off circuit.

(c) Excitation Control System parameters

Dependent upon the type of excitation system Generators must supply the data as set out under Option 1 or 2 below. The data must be resubmitted if any alterations, changes or refurbishment is undertaken.

Option 1

- DC gain of Excitation Loop
- Rated field voltage
- Maximum field voltage
- Minimum field voltage
- Maximum rate of change of field voltage (rising)
- Maximum rate of change of field voltage (falling)
- Details of Excitation Loop described in block diagram form showing transfer functions of individual elements
- Dynamic characteristics of Over-excitation Limiter
- Dynamic characteristics of Under-excitation Limiter.

Option 2

- Excitation System Nominal Response
- Rated Field Voltage
- No-Load Field Voltage
- Excitation System On-Load Positive Ceiling Voltage
- Excitation System No-Load Positive Ceiling Voltage
- Excitation System No-Load Negative Ceiling Voltage.

For both Option 1 and Option 2

Details of Excitation System (including PSS if fitted) described in block diagram form showing transfer functions of individual elements and in a form that is compatible with the software specified by Grid Owner.

Details of Over-excitation Limiter described in block diagram form showing transfer functions of individual elements and in a form that is compatible with the software specified by Grid Owner.

Details of Under-excitation Limiter described in block diagram form showing transfer functions of individual

elements and in a form that is compatible with the software specified by Grid Owner.

(d) Governor Parameters

Dependent upon the type of governor control system Generators must supply the data as set out under Option 1 or 2 below. The data must be resubmitted if any alterations, changes or refurbishment is undertaken.

Option 1

(i) Governor Parameters (for Reheat Steam Units)

- HP governor average gain MW/Hz
- Speeder motor setting range
- HP governor valve time constant
- HP governor valve opening limits
- HP governor valve rate limits
- Reheater time constant (Active Energy stored in reheater)
- IP governor average gain MW/Hz
- IP governor setting range
- IP governor valve time constant
- IP governor valve opening limits
- IP governor valve rate limits
- Details of acceleration sensitive elements in HP & IP governor loop

A governor block diagram showing transfer functions of individual elements and in a form that is compatible with the software specified by Grid Owner.

(ii) Governor Parameters (for Non-Reheat Steam Units and Gas Turbine Units)

- Governor average gain
- Speeder motor setting range
- Time constant of steam or fuel governor valve
- Governor valve opening limits
- Governor valve rate limits
- Time constant of turbine
- Governor block diagram.

Option 2

(i) Governor and associated prime mover Parameters - All Generating Units

- Governor Block Diagram showing transfer function of individual elements including acceleration sensitive elements and in a form that is compatible with the software specified by Grid Owner
- Governor Time Constant (in seconds)
- Speeder Motor Setting Range (%)
- Average Gain (MW/Hz).

(ii) Governor and associated prime mover Parameters - Steam Units

- HP Valve Time Constant (in seconds)
- HP Valve Opening Limits (%)
- HP Valve Opening Rate Limits (%/second)
- HP Value Closing Rate Limits (%/second)
- HP Turbine Time Constant (in seconds)
- IP Valve Time Constant (in seconds)
- IP Valve Opening Limits (%)
- IP Valve Opening Rate Limits (%/second)
- IP Value Closing Rate Limits (%/second)
- IP Turbine Time Constant (in seconds)
- LP Valve Time Constant (in seconds)
- LP Valve Opening Limits (%)
- LP Valve Opening Rate Limits (%/second)
- LP Value Closing Rate Limits (%/second)
- LP Turbine Time Constant (in seconds)
- Reheater Time Constant (in seconds)
- Boiler Time Constant (in seconds)
- HP Power Fraction (%)
- IP Power Fraction (%).

(iii) Governor and associated prime mover Parameters - Gas Turbine Units

- Inlet Guide Vane Time Constant (in seconds)
- Inlet Guide Vane Opening Limits (%)
- Inlet Guide Vane Opening Rate Limits (%/second)
- Inlet Guide Vane Closing Rate Limits (%/second)
- Fuel Valve Constant (in seconds)

- Fuel Valve Opening Limits (%)
- Fuel Valve Opening Rate Limits (%/second)
- Fuel Valve Closing Rate Limits (%/second)
- Waste Heat Recovery Boiler Time Constant (in seconds).

(iv) Governor and associated prime mover Parameters - Hydro Generating Units

- Guide Vane Actuator Time Constant (in seconds)
- Guide Vane Opening Limits (%)
- Guide Vane Opening Rate Limits (%/second)
- Guide Vane Closing Rate Limits (%/second)
- Water Time Constant (in seconds).

(e) Plant Flexibility Performance

The following data is required with respect to each Dispatch Unit:

- # Run-up rate to Registered Capacity,
- # Run-down rate from Registered Capacity,
- # Synchronising Generation,
- * Regulating range,
- * Load rejection capability while still Synchronised and able to supply Load.

Data items marked with a hash (#) should be applicable to a Dispatch Unit which has been Shutdown for forty eight (48) hours.

Data items marked with an asterisk (*) are already requested under partx1, PCA.3.3.1, to facilitate an early assessment by Grid Owner as to whether detailed stability studies will be required before an offer of terms for a relevant Agreement by TNB. Such data items have been repeated here merely for completeness and need not, of course, be resubmitted unless their values, known or estimated, have changed.

PCA.6 User's System Data

PCA.6.1 Introduction

PCA.6.1.1 Each User, whether connected directly via an existing Connection Point to the Transmission System or seeking such a direct connection, shall provide the Grid Owner and GSO with data on its User System which relates to the Connection Site containing the Connection Point both current and forecast, as specified in PCA.6.2 to PCA.6.6.

PCA.6.1.2 Each User must reflect the system effect at the Connection Site(s) of any third party Embedded within its User System whether existing or proposed.

PCA.6.1.3 PCA.6.2 and PCA.6.4 to PCA.6.6 consist of data which is only to be supplied to the Grid Owner and GSO at the Grid Owner and GSO's reasonable request. In the event that the Grid Owner and GSO identifies a reason for requiring this data, the Grid Owner and GSO shall write to the relevant User(s), requesting the data, and explaining the reasons for the request. If the User(s) wishes, the Grid Owner and GSO shall also arrange a meeting at which the request for data can be discussed, with the objective of identifying the best way in which Grid Owner and GSO's requirements can be met.

PCA.6.2 Transient Overvoltage Assessment Data

PCA.6.2.1 It may be necessary for the Grid Owner to undertake transient overvoltage assessments (e.g. capacitor switching transients, switchgear transient recovery voltages, etc). At the Grid Owner and GSO's reasonable request, each User is required to provide the following data with respect to the Connection Site, current and forecast, together with a Single Line Diagram where not already supplied under PCA.2.2.1, as follows:-

(a) Busbar layout plan(s), including dimensions and geometry showing positioning of any current and voltage transformers, through bushings, support insulators, disconnectors, circuit breakers, surge arresters, etc. Electrical parameters of any associated current and voltage transformers, stray capacitances of wall bushings and support insulators, and grading capacitances of circuit breakers;

(b) Electrical parameters and physical construction details of lines and cables and the geometrical details as specified by the Grid Owner and GSO connected at that busbar. Electrical parameters of all plant e.g., transformers (including neutral earthing impedance or zig-zag transformers, if any), series reactors and shunt compensation equipment connected at that busbar (or to the tertiary of a transformer) or by lines or cables to that busbar;

(c) Basic insulation levels (BIL) of all Apparatus connected directly, by lines or by cables to the busbar;

(d) characteristics of overvoltage Protection devices at the busbar and at the termination points of all lines, and all cables connected to the busbar;

(e) fault levels at the lower voltage terminals of each transformer connected directly or indirectly to the TNB Transmission System (Grid System) without intermediate transformation;

(f) the following data is required on all transformers operating at 500kV, 275kV and 132kV: three or five limb cores or single phase units to be specified, and operating peak flux density at nominal voltage;

(g) an indication of which items of equipment may be out of service simultaneously during Planned Outage conditions.

PCA.6.3 HVDC and Power Electronic Devices

PCA.6.3.1 It is occasionally necessary for the Grid Owner and GSO to undertake studies involving HVDC and Power Electronic Devices (e.g. SVC and FACTS Devices etc). At the Grid Owner and GSO's reasonable request, each User is required to provide the following data, as follows:

- HVDC configuration including rating of converter (MW, voltage and current), converter transformer, DC Smoothing Reactors, and DC Filters;
- AC Filters, shunt capacitors, and reactors;
- Detailed block diagrams For HVDC Control System in a form that is compatible with the software specified by Grid Owner and GSO;
- Master Power Controls;
- Pole Controls (current control, voltage control, extinction angle control);
- VDCL (Voltage Dependent Current Limits);
- Firing Controls (Phase Locked Loop);

- Reactive power controller (Q or V Control);
- Supplementary stability control function such fast ramp up/down, frequency limit control and power oscillation damping;
- SVC configuration including rating of converter (MVar, voltage and current);
- Detailed block diagrams For Static Var Compensator (SVC) or STATCOM Control System in a form that is compatible with the software specified by Grid Owner and GSO;
- MVAr Control;
- Voltage Control;
- Power Oscillation Damping Control;
- Susceptance Control;
- Adaptive Gain Control.

PCA.6.4 User's Protection Data

PCA.6.4.1 **Protection** - The following information is required which relates only to Protection equipment which can trip or inter-trip or close any Connection Point circuit-breaker or any TNB Transmission circuit-breaker. This information need only be supplied once, in accordance with the timing requirements set out in PCA.1.4(2), and need not be supplied on a routine annual basis thereafter, although the Grid Owner and GSO should be notified if any of the information changes:

(a) a full description, including estimated settings, for all relays and Protection systems installed or to be installed on the User's System;

(b) a full description of any auto-reclose facilities installed or to be installed on the User's System, including type and time delays;

(c) a full description, including estimated settings, for all relays and Protection systems or to be installed on the generator, generator transformer, Station Transformer and their associated connections;

(d) for Generating Units having (or intended to have) a circuit breaker at the generator terminal voltage, clearance times for electrical faults within the Generating Unit zone;

(e) the most probable fault clearance time for electrical faults on any part of the User's System directly connected to the Transmission System.

PCA.6.5 Harmonic Studies

PCA.6.5.1 It may be necessary for the Grid Owner and GSO to evaluate the production/magnification of harmonic distortion on the Transmission System and User Systems, especially when TNB Transmission and/or a User is connecting equipment such as capacitor banks. At the Grid Owner and GSO's reasonable request, each User is required to submit data with respect to the Connection Site, current and forecast, and where not already supplied under PCA.2.2.5 and PCA.2.2.6, as follows in PCA.6.5.2.

PCA.6.5.2 Overhead lines and underground cable circuits of the User's Subtransmission System must be differentiated and the following data provided separately for each type:

- Positive phase sequence resistance;
- Positive phase sequence reactance;
- Positive phase sequence susceptance;

  and for all transformers connecting the User's Subtransmission System to a lower voltage:

- Rated MVA;
- Voltage Ratio;
- Positive phase sequence resistance;
- Positive phase sequence reactance;

  and at the lower voltage points of those connecting transformers:

- Equivalent positive phase sequence susceptance;
- Connection voltage and MVAr rating of any capacitor bank and component design parameters if configured as a filter;
- Equivalent positive phase sequence interconnection impedance with other lower voltage points;
- The minimum and maximum Demand (both MW and MVAr) that could occur;
- Harmonic current injection sources in Amps at the Connection voltage points. Where the harmonic injection current comes from a diverse group of sources, the equivalent contribution may be established from appropriate measurements;
- Details of traction loads, eg connection phase pairs, continuous variation with time, etc;
- An indication of which items of equipment may be out of service simultaneously during Planned Outage conditions.

PCA.6.6 Voltage Assessment Studies

PCA.6.6.1 It is occasionally necessary for the Grid Owner and GSO to undertake detailed voltage assessment studies (e.g., to examine potential voltage instability, voltage control co-ordination or to calculate voltage step changes). At the Grid Owner and GSO's reasonable request, each User is required to submit the following data where not already supplied under PCA.2.2.5 and PCA.2.2.6.

PCA.6.6.2 For all circuits of the User's Subtransmission System:

- Positive Phase Sequence Reactance;
- Positive Phase Sequence Resistance;
- Positive Phase Sequence Susceptance;
- MVAr rating of any reactive compensation equipment;

and for all transformers connecting the User's Subtransmission System to a lower voltage:

- Rated MVA;
- Voltage Ratio;
- Positive phase sequence resistance;
- Positive Phase sequence reactance;
- Tap-changer range;
- Number of tap steps;
- Tap-changer type: on-load or off-circuit;
- AVC/tap-changer time delay to first tap movement;
- AVC/tap-changer inter-tap time delay;

and at the lower voltage points of those connecting transformers:

- Equivalent positive phase sequence susceptance;
- MVAr rating of any reactive compensation equipment;
- Equivalent positive phase sequence interconnection impedance with other lower voltage points;
- The maximum Demand (both MW and MVAr) that could occur;
- Estimate of voltage insensitive (constant power) load content in % of total load at peak and 75% off-peak load conditions.

PCA.6.7 Short Circuit Analysis:

PCA.6.7.1 Where prospective short-circuit currents on equipment owned, operated or managed by TNB Transmission are greater than 90% of the equipment rating, and in the Grid Owner and GSO's reasonable opinion more accurate calculations of short-circuit currents are required, then at the Grid Owner and GSO's request each User is required to submit data with respect to the Connection Site, current and forecast, and where not already supplied under PCA.2.2.5 and PCA.2.2.6, as follows:

PCA.6.7.2 For all circuits of the User's Subtransmission System:

- Positive phase sequence resistance;
- Positive phase sequence reactance;
- Positive phase sequence susceptance;
- Zero phase sequence resistance (both self and mutuals);
- Zero phase sequence reactance (both self and mutuals);
- Zero phase sequence susceptance (both self and mutuals);

  and for all transformers connecting the User's Subtransmission System to a lower voltage:
- Rated MVA;
- Voltage Ratio;
- Positive phase sequence resistance (at max, min and nominal tap);
- Positive Phase sequence reactance (at max, min and nominal tap);
- Zero phase sequence reactance (at nominal tap);
- Tap changer range;
- Earthing method: direct, resistance or reactance;
- Impedance if not directly earthed;

  and at the lower voltage points of those connecting transformers.
- The maximum Demand (in MW and MVAr) that could occur;
- Short-circuit infeed data in accordance with PCA.2.5.4 unless the User's lower voltage network runs in parallel with the User's Subtransmission System, when to prevent double counting in each node infeed data, a (π) (pi) equivalent comprising the data items of PCA.2.5.4 for each node together with the positive phase sequence interconnection impedance between the nodes shall be submitted.

PCA.7 Additional Data for New Types of Power Stations and Configurations

PCA.7.1 Notwithstanding the Standard Planning Data and Detailed Planning Data set out in this Appendix, as new types of configurations and operating arrangements of Power Stations emerge in future, the Grid Owner and GSO may reasonably require additional data to represent correctly the performance of such Plant and Apparatus on the System, where the present data submissions would prove insufficient for the purpose of producing meaningful System studies for the relevant parties.

<End of Planning Code - Appendix A – Part 2 – Detailed Planning Data >

Planning Data Requirements – Part 3 – Planning Data from the Grid Owner and GSO

PCA.8.0 Network Data

PCA.8.0.1 To allow a User to model the Transmission System, the Grid Owner and GSO will provide the following Network Data to Users, calculated in accordance with Prudent Industry Practice:

PCA.8.1 Single Point of Connection

PCA.8.1.1 For a Single Point of Connection to a User's System, as an equivalent 500kV or 275kV or 132kV source, the data (as at the HV side of the Point of Connection reflecting data given to the Grid Owner and GSO by Users) will be given to a User as follows:

The data items listed under the following parts of PCA.8.3:-

(a) (i), (ii), (iii), (iv), (v) and (vi)

and the data items shall be provided in accordance with the detailed provisions of PCA.8.3 (b) - (e).

PCA.8.2 Multiple Point of Connection

PCA.8.2.1 For a Multiple Point of Connection to a User's System, the equivalent will normally be in the form of a π model or extension with a source at each node and a linking impedance. The data at the Connection Point will be given to a User as follows:

The data items listed under the following parts of PCA.8.3:

(a) (i), (ii), (iv), (v), (vi), (vii) and (viii)

and the data items shall be provided in accordance with the detailed provisions of PCA.8.3 (b) - (e).

PCA.8.2.2 When an equivalent of this form is not required, the Grid Owner and GSO will not provide the data items listed under the following parts of PCA.8.3:-

(a) (vii) and (viii)

PCA.8.3 Data Items

(a) The following is a list of data utilised in this part of the PC. It also contains rules on the data which generally apply.

(i) symmetrical three-phase short circuit current infeed at the instant of fault from the Transmission System, (I_1");

(ii) symmetrical three-phase short circuit current from the Transmission System after the subtransient fault current contribution has substantially decayed, (I_1');

(iii) the zero sequence source resistance and reactance values at the Point of Connection, consistent with the maximum infeed below;

(iv) the pre-fault voltage magnitude at which the maximum fault currents were calculated;

(v) the positive sequence X/R ratio at the instant of fault;

(vi) the negative sequence resistance and reactance values of the Transmission System seen from the Point of Connection, if substantially different from the values of positive sequence resistance and reactance which would be derived from the data provided above;

(vii) the initial positive sequence resistance and reactance values of the two (or more) sources and the linking impedance(s) derived from a fault study constituting the (π) (pi) equivalent and evaluated without the User network and load and;

(viii) the corresponding zero sequence impedance values of the (π) (pi) equivalent.

(b) To enable the model to be constructed, the Grid Owner and GSO will provide data based on the following conditions.

(c) The initial symmetrical three phase short circuit current and the transient period three phase short circuit current will normally be derived from the fixed impedance studies. The latter value should be taken as applying at times of 120ms and longer. Shorter values may be interpolated using a value for the subtransient time constant of 40ms. These fault currents will be obtained from a full System study based on load flow analysis that takes into account any existing flow across the point of connection being considered.

(d) Since the equivalent will be produced for the 500kV or 275kV parts of the Transmission System, the Grid Owner and GSO will provide the appropriate supergrid transformer data.

(e) The positive sequence X/R ratio and the zero sequence impedance value will correspond to the Grid Owner and GSO source network only, that is with the section of network if any with which the equivalent is to be used excluded. These impedance values will be derived from the condition when all Generating Units are Synchronised to the Transmission System or a User's System and will take account of active sources only including any contribution from the load to the fault current. The passive component of the load itself or other system shunt impedances should not be included.

(f) A User may at any time, in writing, specifically request for an equivalent to be prepared for an alternative System condition, for example where the User's System peak does not correspond to the Transmission System peak, and the Grid Owner and GSO will, insofar as such request is reasonable, provide the information as soon as reasonably practicable following the request.

<End of Planning Code - Appendix A – Part 3 – Planning Data from the Grid Owner and GSO>

Planning Code Appendix B

Single Line Diagrams

The diagrams below show three examples of single line diagrams, showing the detail that should be incorporated in the diagram.

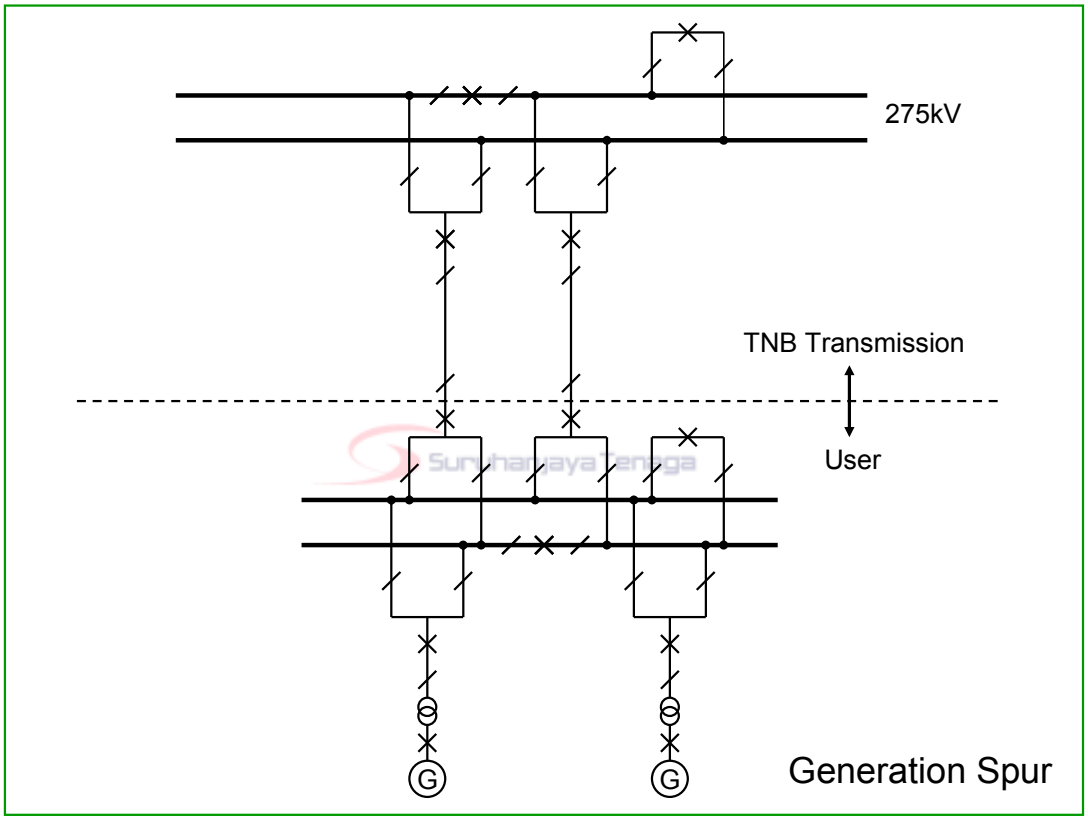

Generator connection by a spur or a radial double-circuit transmission lines and boundary indicating interface between Grid Owner and the User. This is also a typical connection to a Network Operator.

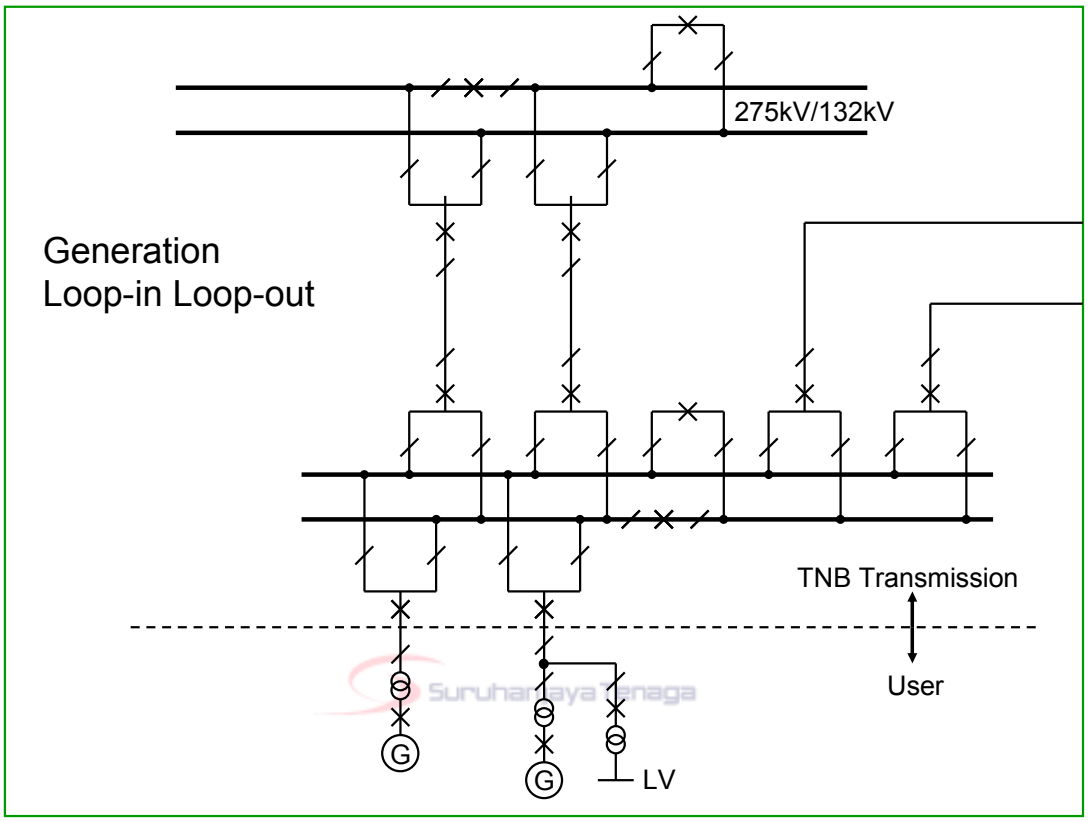

Generator connected to a Grid Substation served by loop-in and out of double-circuit transmission lines. The substation is normally term power station switchyard.

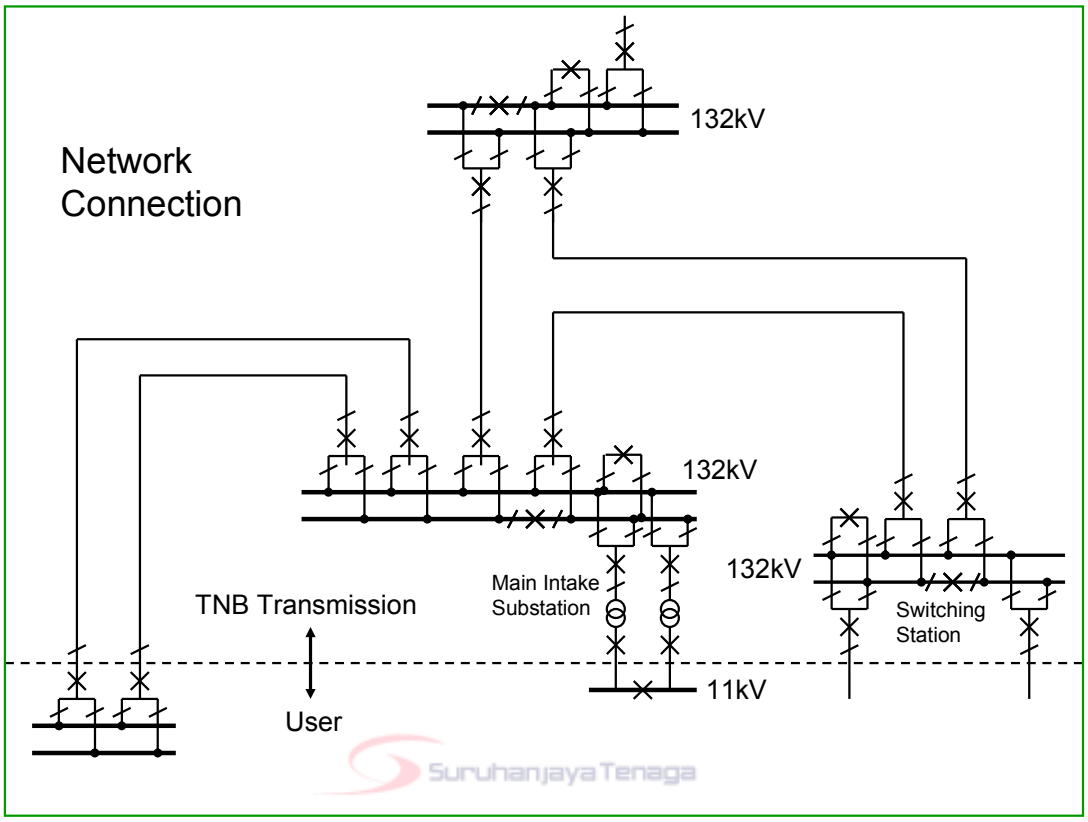

Typical connection of switching stations serving Users, and main intake substation serving a Distributor.

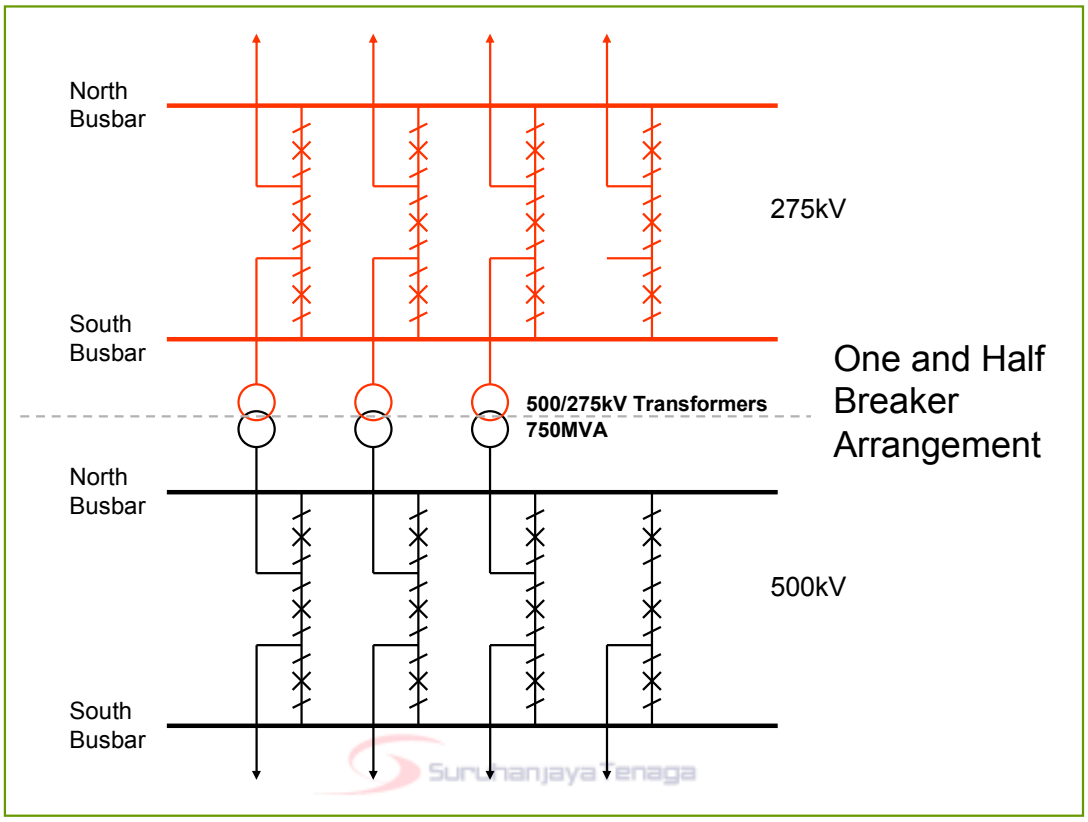

Typical busbar arrangement for 500/275kV substation using one and half breaker scheme

< End of Planning Code – Appendix B >

<END OF PLANNING CODE>

Part V: Connection Code

CC1 Introduction

CC1.1 The Connection Code (CC) specifies both the minimum technical, design and operational criteria which must be complied with by any User connected to or seeking connection with the Transmission System or Generators (other than in respect of Minor Generating Plant) connected to or seeking connection to a User's System which is located in Peninsular Malaysia. The CC also sets out the minimum technical, design and operational criteria with which the Grid Owner and GSO as well as the Users will ensure compliance in relation to the part of the Transmission System at the Connection Site with Users.

CC2 Objectives

CC2.1 The objective of this CC is to ensure that by specifying minimum technical, design and operational criteria the basic rules for connection to the Transmission System and/or to a User's System are similar for all Users of an equivalent category and will enable the Grid Owner and GSO as well as the Users to comply with their statutory and Licence obligations.

CC2.2 No connection, existing, new, modified or to be modified shall impose unacceptable effects upon the Transmission System or on any User System nor will it be the cause of unacceptable effects by its connection to the Transmission System. In this respect unacceptable effects are all effects which cause the Grid Owner and GSO as well as any User to violate the Licence Standards and to become non-compliant with this Grid Code, statutory and Licence obligations.

CC3 Scope

CC3.1 The CC applies to the Grid Owner and GSO, the Single Buyer and to Users, which in this CC means:

(1) Generators (other than those which only have Embedded Minor Generating Plant);
(2) TNB Transmission;
(3) Distributors;
(4) Network Operators;
(5) Directly Connected Customers; and
(6) Parties seeking connection to the Transmission System or on to a User System.

CC3.2 The above categories of User will become bound by the CC prior to them generating, supplying or consuming, as the case may be, and references to the various categories should, therefore, be taken as referring to them in that prospective role as well as to Users actually connected.

CC4 Connection Principles

CC4.1 The application process for seeking connection to or for modification(s) to an existing connection and the data submission requirements for this purpose are described in detail in the Planning Code of this Grid Code PC4.7, 4.8, 4.9 and 4.10. Each User seeking connection to or for modification(s) to an existing connection shall complete the appropriate connection application form provided by the Grid Owner and GSO. The completed application form for a Connection Application, or for a variation of an existing Connection, as the case may be, will be sent to the Grid Owner and GSO as more particularly provided in the application form provided by the Grid Owner and GSO.

CC4.2 The design and implementation of connections between Transmission System and User Systems shall be in accordance and compliant with Licence Standards and the Planning Code (PC). The design and implementation of metering installations shall be in accordance and compliant with Metering Code (MC). The connections will be operated in accordance and compliant with Operational Codes (OCs) and Scheduling and Dispatch Codes (SDCs).

CC4.3 The Grid Owner and GSO shall decide the point of connection and the voltage at which the User shall be connected to the Transmission System to enable sustained compliance with this Grid Code, taking into account the User's views. Generators (other than

in respect of Minor Generating Plant) and other Users seeking connection to or modifications to their existing connections to a User's System located in Peninsular Malaysia, shall consult the Grid Owner and GSO in deciding the point and the voltage at which the new connection shall be made and that both the new and modified connection shall enable sustained compliance with this Grid Code.

CC4.4 The relevant Agreements contain provisions relating to the procedure for connection to the Transmission System or, in the case of Embedded Generating Plant or Minor Generating Plant, becoming operational. The relevant Agreements also include provisions relating to certain conditions to be complied with by Users prior to the Grid Owner and GSO notifying the User that it has the right to become operational.

CC5 Connection Process and Information Exchange

CC5.1 The provisions relating to connecting to the Transmission System or to a User's System as in the case of a connection of a Generating Plant or Minor Generating Plant are contained in the relevant Agreement with a User. These Agreements include provisions relating to both the submission of information and reports relating to compliance with the relevant Connection Code for that User, Safety Rules, commissioning programmes, Operation Diagrams and approval to connect.

CC5.2 Prior to connection of a User's facility to the Transmission System the following shall be submitted:

(1) updated Planning Code data (both Standard Planning Data and Detailed Planning Data), with any estimated values assumed for planning purposes confirmed or, where practical, replaced by validated actual values and by updated estimates for the future and by updated forecasts for Forecast Data items such as Demand, pursuant to the requirements of the Planning Code;

(2) details of the Protection arrangements and settings referred to in CC6;

(3) copies of all Safety Rules and Local Safety Instructions applicable at User's Sites which will be used at the Transmission System/User interface (which, for the purpose

of OC8, must be to the GSO's satisfaction regarding the procedures for Isolation and Earthing);

(4) information to enable the Grid Owner to prepare Site Responsibility Schedules on the basis of the provisions set out in Appendix 1 of this Connection Code;

(5) an Operation Diagram for all HV Apparatus on the User side of the Connection Point as described in CC7;

(6) the proposed name of the User Site (which shall not be the same as, or confusingly similar to, the name of any TNB Site or of any other User Site);

(7) written confirmation that Safety Coordinators acting on behalf of the User are authorised and competent pursuant to the requirements of OC8;

(8) a list of the telephone numbers for Joint System Incidents at which senior management representatives nominated for the purpose can be contacted and confirmation that they are fully authorised to make binding decisions on behalf of the User, pursuant to OC7;

(9) a senior management representative who has been duly authorised to sign Site Responsibility Schedules on behalf of the User;

(10) information to enable the Grid Owner and GSO to prepare Site Common Drawings as described in CC7;

(11) a list of the telephone numbers for the Users facsimile machines referred to in CC6.5.8; and

(12) a list of persons Authorised for switching duties and testing.

CC5.3 In addition, at the time the information is given under CC5.2 (7), Grid Owner in consultation with the GSO will provide written confirmation to the User that the Safety Coordinators acting on behalf of Grid Owner are authorised and competent pursuant to the requirements of OC8.

CC5.4 The Grid Owner and GSO shall, at all stages in the connection process, table relevant information relating to studies and assessments carried out by the Grid Owner and GSO in relation to the technical design and implementation of the connection. Such information will include, but will not be limited to, the following:

(1) load flow analysis;

(2) short circuit analysis;

(3) transient and steady-state stability analysis;

(4) annual and monthly demand duration curves;

(5) forced outage rates of Transmission System circuits in the vicinity of the Connection Point to the User System.

CC5.5 All Users shall identify data submitted pursuant to this CC that are required to be maintained as confidential and notify these to the Grid Owner and GSO. This data shall be kept confidential.

CC5.6 Any information disclosed to the User by the Grid Owner and GSO in relation to its Connection Point shall be treated as "confidential" by the User and shall not be shared in any way by any other party without prior written permission of the Grid Owner and GSO.

CC6 Technical Design and Operational Criteria

CC6.1 General

CC6.1.1 The following is an overview of the technical design and operational criteria governing the design and operation of the Transmission System. The full details of the technical design and operational criteria as well as the procedures followed by the Grid Owner and GSO are included in the Licence Standards which are the reference document(s) that shall be consulted for the avoidance of any doubt.

CC6.2 Transmission System Performance Characteristics

CC6.2.1 The Grid Owner and GSO shall ensure that, subject to the provisions in this Grid Code and Licence Standards, the Transmission System complies with the following technical, design and operational criteria in relation to the part of the Transmission System at the Connection Site with a User. In relation to operational criteria the GSO may be unable and will not be required to comply with this obligation to the extent that:

(1) there is insufficient Generating Plant or User Systems are not available; or

(2) relevant Users do not comply with GSO instructions or otherwise do not comply with the Grid Code.

CC6.2.2 Each User shall also ensure that it's Plant and Apparatus complies with the criteria set out in CC6.2.5.

CC6.2.3 Grid Frequency Variations

CC6.2.3.1 The Frequency of the Grid System shall be nominally 50Hz and shall be controlled within the limits of 49.5Hz - 50.5Hz unless exceptional circumstances prevail.

CC6.2.3.2 In exceptional circumstances the System Frequency could rise to 52Hz or fall to 47Hz but sustained operation outside this range is not envisaged. Design of User's Plant and Apparatus must enable operation of that Plant and Apparatus within that range in accordance with the following:

Frequency Range	Requirement
47.5Hz - 52Hz	Continuous operation is required.
47Hz - 47.5Hz	Operation for a period of at least 10 seconds is required each time the **Frequency** is below 47.5Hz.

CC6.2.4 Transmission System Voltage Variations

CC6.2.4.1 Subject to the Licence Standards and as provided below, the voltage on the 500kV part of the Transmission System at each Connection Site with a User will normally remain within (±5) % of the nominal value unless abnormal conditions prevail. The minimum voltage is (-10) % and the maximum voltage is (+10) % unless abnormal conditions prevail, but voltages between (+5) % and (+10) % will not last longer than fifteen (15) minutes unless abnormal conditions prevail. Voltages on the 275kV and 132kV parts of the Transmission System at each Connection Site with a User will normally remain within the limits (±10) % of the nominal value unless abnormal conditions prevail. At nominal System voltages below 132kV the Transmission System at each Connection Site with a User will normally remain within the limits (±6) % of the nominal value unless abnormal conditions prevail. Under fault conditions, voltage may transiently collapse to zero at the point of fault until the fault is cleared.

CC6.2.4.2 The Grid Owner and GSO and a User may agree to greater or lesser variations in voltage to those set out above in relation to a particular Connection Site, and in so far as a greater or lesser variation is agreed, the relevant figure set out above shall, in relation to that User at the particular Connection Site, be replaced by the figure agreed.

CC6.2.5 Voltage Waveform Quality

CC6.2.5.1 All Plant and Apparatus connected to the Transmission System, and that part of the Grid System at each Connection Site, should be capable of withstanding the following distortions of the voltage waveform in respect of harmonic content and phase unbalance:

(a) Harmonic Content - The maximum total levels of harmonic distortion on the Transmission System from all sources under both Planned Outage and fault outage conditions, (unless abnormal conditions prevail) shall not exceed:

(i) at 500kV, 275kV and 132kV a Total Harmonic Distortion of 3.0%; and

(ii) the individual harmonic limits shall be compliant with limits as specified in the Licence Standards.

(b) Phase Unbalance - Under Planned Outage conditions, the maximum negative phase sequence component of the phase voltage on the Transmission System should remain below 1% unless abnormal conditions prevail.

CC6.2.5.2 Infrequent short duration peaks may be permitted to exceed the levels in CC6.2.5.1 (a) for harmonic distortion subject to the prior agreement of the Grid Owner and GSO. The Grid Owner and GSO will only agree after the completion of and subject to a satisfactory outcome of a specific assessment of the impact of these levels on the TNB Transmission's and other User's Apparatus.

CC6.2.5.3 Under the planned outage conditions, infrequent short duration peaks with a maximum value of 2% are permitted for Phase Unbalance, subject to the prior agreement of the Grid Owner and GSO. The Grid Owner and GSO will only agree following a specific assessment of the impact of these levels on the TNB Transmission's and other User's Plant and Apparatus with which it is satisfied.

CC6.2.6 Load Unbalance

CC6.2.6.1 At the terminals of a User's installation or specific Load the unbalance voltage shall not exceed 1% for five (5) occasions within any thirty (30) minutes time period.

CC6.2.6.2 In terms of traction Loads connected to the Transmission System the acceptable limits of unbalance are in accordance with "Engineering Recommendation (E/R) P24, issued by the Electricity

Council of UK in 1984 entitled 'AC Traction Supplies to British Rail' and its successor document P29 issued in 1990 'Planning Limits for Voltage unbalance in the United Kingdom'". The Grid Owner and GSO uses the procedures contained in Licence Standards to plan the connection of Loads producing Unbalance and applies the limits therein in measuring and monitoring the levels of unbalance at such points of connection.

CC6.2.7 Voltage Fluctuations

Voltage fluctuations at a Point of Common Coupling with a fluctuating Load directly connected to the Transmission System shall not exceed 1% of the voltage level for step changes, which may occur repetitively. Any large voltage excursions other than step changes or less frequent step changes may be allowed up to a level of 3% provided that this does not constitute a risk to the Transmission System or, in Grid Owner and GSO's view, any other party connected to the System.

CC6.2.7.1 The planning limits for the Short and Long Term Flicker Severity applicable for Fluctuating Loads connected to the Transmission System are as set out in the table below.

Maximum Allowable Flicker Severity

Transmission System Voltage Level at which the **Fluctuating Load is Connected**	Absolute Short Term Flicker Severity (**P_{st}**)	Absolute Long Term Flicker Severity (**P_{lt}**)
500, 275 and 132kV	0.8	0.6
Less than 132kV	1.0	0.8

CC6.3 Requirements for User's and Connected Network Equipment at the Connection Point

CC6.3.1 Introduction

CC6.3.1.1 The following requirements apply to Plant and Apparatus relating to the User/Connection Point, which each User and the Grid Owner and GSO must ensure are complied with in relation to its Plant and Apparatus.

CC6.3.2 General Requirements

CC6.3.2.1 The design of connections between the Transmission System and:-

(a) any Generating Unit; or
(b) any Network Operator's User System; or
(c) Distributor; or
(d) Directly Connected Customer's equipment; or
(e) any Interconnector;

will be consistent with the Licence Standards.

CC6.3.2.2 The Transmission System at nominal System voltages of 132kV and above is designed to be earthed with an Earth Fault Factor of below 1.4. Under fault conditions the rated Frequency component of voltage could fall transiently to zero on one or more phases or rise to 140% phase-to-earth voltage. The voltage rise would last only for the time that the fault conditions exist. The fault conditions referred to here are those existing when the type of fault is single or two phase-to-earth.

CC6.3.2.3 For connections to the Transmission System at nominal System voltages of below 132kV the Earthing requirements and voltage rise conditions will be advised by the Grid Owner and GSO as soon as practicable prior to connection.

CC6.3.2.4 Typical Basic Impulse Insulation Level (BIL) of the Transmission System is as given below. The User's Plant and Apparatus is required to at least match these insulation levels. These may vary under specific circumstances by agreement between Grid Owner in consultation with the GSO and the User.

System Voltage (kV)	BIL (kV)
500	1550
275	1050

System Voltage (kV)	BIL (kV)
132	650

CC6.3.3 Substation Plant and Apparatus

CC6.3.3.1 The following provisions shall apply to all Plant and Apparatus which is connected at the voltage of the User/Transmission Connection Point and which is contained in equipment bays that are within the Transmission System busbar protection zone at the User/Transmission Connection Point. This includes, but not exclusively, circuit breakers, switch disconnectors, disconnectors, Earthing Devices, power transformers, voltage transformers, reactors, current transformers, surge arresters, bushings, neutral equipment, capacitors, line traps, coupling devices, external insulation and insulation co-ordination devices. Where necessary, this may be more precisely defined in the relevant agreement.

a. Plant and/or Apparatus prior to this Grid Code becoming effective - Each item of such Plant and/or Apparatus which was installed prior to this Grid Code becoming effective and is the subject of an Agreement with regard to the purpose for which it is in use or intended to be in use, shall comply with the relevant standards/specifications applicable at the time that the Plant and/or Apparatus was commissioned and any further requirements as specified in the that Agreement.

b. Plant and/or Apparatus for a new Connection Point after this Grid Code becoming effective - Each item of such Plant and/or Apparatus installed in relation to a new Connection Point after this Grid Code becomes effective shall comply with the relevant Technical Specifications and any further requirements identified by the Grid Owner and GSO, acting reasonably, to reflect the options to be followed within the Technical Specifications and/or if necessary to complement the Technical Specifications so as to enable the Grid Owner and GSO to comply with its obligations in relation to the Transmission System. This information, including the application dates of the relevant Technical Specifications, will be as specified in the relevant Agreement.

c. User Plant and/or Apparatus being moved, re-used or modified - If, after its installation, any such item of Plant and/or Apparatus is subsequently:-

(i) moved to a new location; or

(ii) used for a different purpose; or

(iii) otherwise modified;

then the standards/specifications as described in (a) or (b) above as applicable will apply as appropriate to such Plant and/or Apparatus, which must be reasonably fit for its intended purpose having due regard to the obligations of the Grid Owner and GSO and the relevant User under their respective Licences. Use of the Plant and/or Apparatus at any site other than the original site of connection to the transmission system is subject to approval of the Grid Owner and GSO.

CC6.3.3.2 Plant and Apparatus to be connected to Transmission System is required to meet and conform to relevant Technical Specifications and standards as agreed by Grid Owner and the User and included in the relevant Agreement. These Technical Specifications and standards shall include:

(a) relevant Malaysian national standards (MS);
(b) relevant international, European technical standards, such as IEC, ISO and EN;
(c) other relevant national standards such as BS, DIN and ANSI, ASA.

The User shall ensure that the specification of Plant and Apparatus at the Connection Point shall be such as to permit operation within the Licence Standards and the applicable safety procedures agreed between Grid Owner and GSO and the User.

CC6.3.3.3 Grid Owner shall maintain a list of those Technical Specifications and additional requirements which might be applicable under this CC6.2.1.2 and which may be referenced by the Single Buyer in consultation with the GSO in the relevant Agreement. Grid Owner shall provide a copy of the list upon request to any User. Grid Owner shall also provide a copy of the list to any new User upon receipt of an application form for an Agreement for a new Connection Point.

CC6.3.3.4 Where the User provides Grid Owner with information and/or test reports in respect of Plant and/or Apparatus which the User reasonably believes demonstrate the compliance of such items with the provisions of a Technical Specification then Grid Owner shall promptly and without unreasonable delay give due and proper consideration to such information.

CC6.3.3.5 Plant and Apparatus shall be designed, manufactured and tested in premises with an accredited certificate in accordance with the

quality assurance requirements of the relevant standard in the BS EN ISO 9000 series (or equivalent as reasonably approved by Grid Owner) or in respect of test premises which do not include a manufacturing facility premises with an accredited certificate in accordance with BS EN 45001. The Grid Owner shall have the right to witness such tests.

CC6.3.4 Requirements relating to Generator/TNB Transmission Connection Points

CC6.3.4.1 Each connection between a Generating Unit or a CCGT Module and the Transmission System must be controlled by a circuit breaker capable of interrupting the maximum short circuit current at the point of connection. A circuit breaker at the generator terminals is also required. The Generating Unit shall also have sufficient protection systems to prevent or limit damage to its generation and auxiliary equipment. The protection systems shall guard for contingencies both within and external to the Generating Unit facility. The values of short circuit current and the rating of Grid Owner's circuit breakers at existing and committed Connection Points for future years will be supplied to Users seeking connection by the Grid Owner and GSO on request.

CC6.3.4.2 Protection of Generating Units and their connections to the Transmission System must meet the minimum requirements given below. These are necessary to reduce the impact of faults on circuits owned by Generators on the Transmission System to a practical minimum.

(i) The fault clearance times for faults on the Generator's equipment directly connected to the Transmission System and for faults on the Transmission System directly connected to the Generator's equipment, from fault inception to the circuit breaker arc extinction, shall be as set out in the Licence Standards.

(ii) The probability that the fault clearance times stated in accordance with the Licence Standards will be exceeded by any given fault, must be less than 2%.

(iii) The Generating Unit shall be capable of operating continuously for faults in the Transmission System cleared within the times stipulated above.

(iv) For the event that the above fault clearance times are not met as a result of failure to operate on the Main Protection System(s) provided, the Generators shall provide Back-Up

Protection. The Grid Owner will also provide Back-Up Protection and these Back-Up Protection System(s) will be co-ordinated so as to provide Discrimination.

(v) On a Generating Unit connected to the Transmission System where only one Main Protection is provided to clear faults on the HV Generator Connections within the required fault clearance time, the Back-Up Protection provided by the Generators shall operate to give a fault clearance time of no slower than 300ms at the minimum infeed for normal operation for faults on the HV Generator Connection. On Generating Units connected to the Transmission System at 500 kV and 275 kV where two Main Protections are provided and on Generating Units connected to the Transmission System at 132 kV and below, the Back-Up Protection shall operate to give a fault clearance time 600 ms at the minimum infeed for normal operation for faults on the HV Generator Connections.

(vi) Generators' Back-Up Protection will also be required to withstand, without tripping, the loading incurred during the clearance of a fault on the Transmission System by breaker fail Protection at 500kV or 275kV or of a fault cleared by Back-Up Protection where the Generator is connected at 132kV and below. This will permit Discrimination between Generator Back-Up Protection and Back-Up Protection provided on the Transmission System and other User's Systems.

(vii) When the Generating Unit is connected to the Transmission System at 500kV or 275kV and a circuit breaker is provided (by the Generator, or Grid Owner), to interrupt fault current interchange with the Transmission System, or Generator's System, as the case may be, Circuit Breaker Fail Protection shall be provided by the Generator, and Grid Owner,, on this circuit breaker. In the event, following operation of a Protection system, of a failure to interrupt fault current by these circuit-breakers within the Fault Current Interruption Time, the circuit breaker fail Protection is required to initiate tripping of all the necessary electrically adjacent circuit-breakers so as to interrupt the fault current within the next 250 ms. For a Generating Unit connected at 132kV this time is 300ms.

(viii) The target performance for the System Fault Dependability Index shall be not less than 99%. This is a measure of the ability of Protection to initiate successful tripping of circuit

breakers which are associated with the faulty item of Apparatus.

CC6.3.4.3 Protection of Interconnecting Connections - The requirements for the provision of Protection equipment for interconnecting connections will be specified in the relevant agreement by the Single Buyer in consultation with the Grid Owner and GSO. In this CC the term "interconnecting connections" means the primary conductors from the current transformer accommodation on the circuit side of the circuit breaker to the Connection Point.

CC6.3.4.4 Circuit-breaker Fail Protection - The Generator shall install Circuit Breaker Fail Protection equipment in accordance with the requirements of the relevant Agreement.

CC6.3.4.5 Loss of Excitation Protection - The Generator shall provide Protection to detect loss of excitation on a Generating Unit and initiate a Generating Unit trip.

CC6.3.4.6 Pole-Slipping Protection - Where, in the Grid Owner and GSO's reasonable opinion, System requirements dictate, the Grid Owner and GSO shall specify a requirement for Generators to fit pole-slipping Protection on their Generating Units in the relevant Agreement.

CC6.3.4.7 Special Protection Measures – Where in the Grid Owner and GSO's reasonable opinion as confirmed by studies there is a need to install Plant and Equipment and operational measures to ensure stable operation of a Generating Plant on the Grid System the Grid Owner and GSO shall identify the requirement for the Generator to implement the Special Protection Measures on their Generating Units and in the Power Station. The Grid Owner and GSO shall specify the Special Protection Measures in the relevant Agreement for Generating Plant seeking connection to the Transmission System or a modification to the existing relevant Agreement in consultation with the Single Buyer for Generating Plant connected to the Transmission System. The Grid Owner and GSO shall review the adequacy and the full applicability of the Special Protection Measures on a regular basis in accordance with and as appropriate to the development of the Grid System. This review shall include any changes to operative settings of the Special Protection Measures and any alterations to the overall operation or additional provisions for the Special Protection Arrangement.

CC6.3.4.8 Signals for Revenue Metering - Generators shall install current and voltage transformers supplying all tariff meters at a voltage to be specified in, and in accordance with, the relevant Agreement and the Metering Code.

CC6.3.4.9 Work on Protection Equipment - No busbar Protection, mesh corner Protection, circuit-breaker fail Protection relays, AC or DC wiring (other than power supplies or DC tripping associated with the Generating Unit itself) may be worked upon or altered by the Generator personnel in the absence of a representative of Grid Owner.

CC6.3.4.10 Relay Settings - Protection and relay settings will be co-ordinated (both on connection and subsequently) across the Connection Point in accordance with the relevant Agreement to ensure effective disconnection of faulty Apparatus.

CC6.3.4.11 High Speed and Delayed Auto Reclosing - The Transmission System is equipped with High Speed Delayed Auto Reclosing facilities with the general characteristics as given below to mitigate the impact of transmission line faults on the Grid System. The Generating Units shall remain operational on the Transmission System without tripping and adverse behaviour during and after the operation of the auto reclosing equipment.

System Voltage	High Speed Single-Pole	Delayed Three-Pole
500kV	500 to 750 millisecond	From 3 to 10 seconds
275kV	750 millisecond	From 3 to 10 seconds
132kV	Not applicable	From 3 to 10 seconds

CC6.3.5 Requirements relating to Network Operator/Grid Owner_and Directly Connected Customers/ Connection Points

CC6.3.5.1 Protection Arrangements for Network Operators and Directly Connected Customers - Protection of Network Operator and Directly Connected Customers User Systems directly supplied from the Transmission System, must meet the minimum requirements referred to below:

(a) The fault clearance times for faults on the Network Operator and Directly Connected Customer equipment directly connected to the Transmission System and for faults on the Transmission System directly connected to the Network Operator and Directly Connected Customer equipment, from fault inception to the circuit breaker arc extinction, shall be as set out in the Licence Standards.

(b) The probability that the fault clearance times stated in accordance with the relevant Agreement will be exceeded by any given fault, must be less than 2%.

(c) The Network Operator and Directly Connected Customer equipment shall be capable of operating continuously for faults in the Transmission System cleared within the times stipulated above.

(d) For the event that the above fault clearance times are not met as a result of failure to operate on the Main Protection System(s) provided, the Network Operator or Directly Connected Customer shall provide Back-Up Protection. The Grid Owner will also provide Back-Up Protection and these Back-Up Protection System(s) will be co-ordinated so as to provide Discrimination.

(e) For connections with the Transmission System at 132kV and below, it is normally required that the Back-Up Protection on the Transmission System shall discriminate with the Network Operator or Directly Connected Customer's Back-Up Protection.

(f) For connections with the Transmission System at 500kV or 275kV, the Back-Up Protection will be provided by the Network Operator or Directly Connected Customer, as the case may be, with a fault clearance time not slower than 300mS for faults on the Network Operator's or Directly Connected Customer's Apparatus.

(g) Such Protection will also be required to withstand, without tripping, the loading incurred during the clearance of a fault on the Transmission System by breaker fail Protection at 500kV or 275kV. This will permit Discrimination between

Network Operator and Directly Connected Customer, as the case may be, Back-Up Protection and Back-Up Protection provided on the Transmission System and other User Systems. The requirement for and level of Discrimination required will be specified in the relevant Agreement.

(h) Where the Network Operator or Directly Connected Customer is connected to the Transmission System at 500kV or 275kV, and a circuit breaker is provided (by the Network Operator or Directly Connected Customer, or Grid Owner, as the case may be) to interrupt the interchange of fault current with the Transmission System or the System of the Network Operator or Directly Connected Customer, as the case may be, Circuit Breaker Fail Protection will be provided by the Network Operator or Directly Connected Customer, or Grid Owner, as the case may be, on this circuit breaker.

(i) In the event, following operation of a Protection system, of a failure to interrupt fault current by these circuit-breakers within the Fault Current Interruption Time, the Circuit Breaker Fail Protection is required for all switchgear at 500kV, 275kV and Gas Insulated Switchgear at 132kV to initiate tripping of all the necessary electrically adjacent circuit-breakers so as to interrupt the fault current within the next 250 ms. For a connection at 132kV, where gas insulated switchgear is not used this fault current interruption time is 300ms.

(j) The target performance for the System Fault Dependability Index shall be not less than 99%. This is a measure of the ability of Protection to initiate successful tripping of circuit breakers which are associated with the faulty items of Apparatus.

CC6.3.5.2 Fault Disconnection Facilities - Where no circuit breaker is provided by the Grid Owner at the User's connection voltage, the User must provide the means of tripping all the User's circuit breakers necessary to isolate faults or System abnormalities on the Transmission System. In these circumstances, for faults on the User's System, the User's Protection should also trip higher voltage Transmission System circuit breakers. These tripping facilities shall be in accordance with the requirements specified in the relevant Agreement.

CC6.3.5.3 Automatic Switching Equipment - Where automatic reclosure of Transmission System circuit breakers is required following faults on the User's System, automatic switching equipment shall be

provided in accordance with the requirements specified in the relevant Agreement.

CC6.3.5.4 Relay Settings - Protection and relay settings will be co-ordinated (both on connection and subsequently) across the Connection Point in accordance with the relevant Agreement to ensure effective disconnection of faulty Apparatus.

CC6.3.5.5 Work on Protection equipment - Where the Grid Owner owns the busbar at the Connection Point, no busbar Protection, mesh corner Protection relays, AC or DC wiring (other than power supplies or DC tripping associated with the Network Operator or Directly Connected Customer's Apparatus, as the case may be, itself) may be worked upon or altered by the Network Operator or Directly Connected Customer, as the case may be, personnel in the absence of a representative of the Grid Owner.

CC6.3.5.6 Protection of Interconnecting Connections - The requirements for the provision of Protection equipment for interconnecting connections will be specified in the relevant Agreement.

CC6.3.5.7 High Speed and Delayed Auto Reclosing - The Transmission System is equipped with High Speed Delayed Auto Reclosing facilities with the general characteristics as given below, to mitigate the impact of transmission line faults on the Transmission System. The Network Operator or Directly Connected Customer, as the case may be, User's System shall remain operational on the Transmission System without tripping and adverse behaviour during and after the operation of the auto reclosing equipment.

System Voltage	High Speed Single-Pole	Delayed Three-Pole
500kV	500 to 750 millisecond	From 3 to 10 seconds
275kV	750 millisecond	From 3 to 10 seconds
132kV	Not applicable	From 3 to 10 seconds

CC6.3.5.8 Special Protection Measures – Where in the Grid Owner and GSO's reasonable opinion as confirmed by studies there is need to install Plant and Equipment and operational measures to ensure stable operation of the Grid System the GSO will specify a requirement for the Grid Owner or a Distributor or a Network Operator or a Directly Connected Customer to implement the Special Protection Measures on the Transmission System or User System as the case may be as specified by the GSO. The GSO shall review the adequacy and the full applicability of the Special Protection Measures on a regular basis in line with Grid System development. This review will include any changes to operative settings of the Special Protection Measures and any alterations to the overall operation of the scheme.

CC6.3.5.9 **Requirements to conduct test**

CC6.3.5.9.1 Network Operator / Grid Owner and Directly Connected Customers shall be responsible for carrying out tests to prove compliance on the requirements stated in this CC.

CC6.3.5.9.2 All tests shall meet at least the requirements stated in OC10.

CC6.4 General Requirements for Generating Units

CC6.4.1 Introduction

CC6.4.1.1 This section sets out the technical and design criteria and performance requirements for Generating Units (whether directly connected to the Transmission System or Embedded) which each Generator must ensure are complied with in relation to its Generating Units, but does not apply to any plant group with a total registered capacity of less than 50MW, hydro units and renewable energy plant not designed for Frequency and voltage control. References to Generating Units in this CC6.4 should be read accordingly. In such cases the Grid Owner and GSO shall provide appropriate provisions for inclusion in the relevant Agreement.

CC6.4.2 Plant Performance Requirements

CC6.4.2.1 All Generating Units must be capable of supplying rated power output (MW) at any point between the limits 0.85 power factor lagging and 0.95 power factor leading at the Generating Unit

terminals. All Generating Units must also be capable of operating at any point within the capability chart corrected for the site conditions. The short circuit ratio of Generating Units shall be not less than 0.5.

CC6.4.2.2 The Generating Unit and/or CCGT Module must be capable of

(a) continuously maintaining constant Active Power output for System Frequency changes within the range 50.5 to 49.5 Hz; and

(b) maintaining its Active Power output at a level not lower than the figure determined by the linear relationship shown in figure below for System Frequency changes within the range 49.5 to 47 Hz, such that if the System Frequency drops to 47 Hz the Active Power output does not decrease by more than 5%.

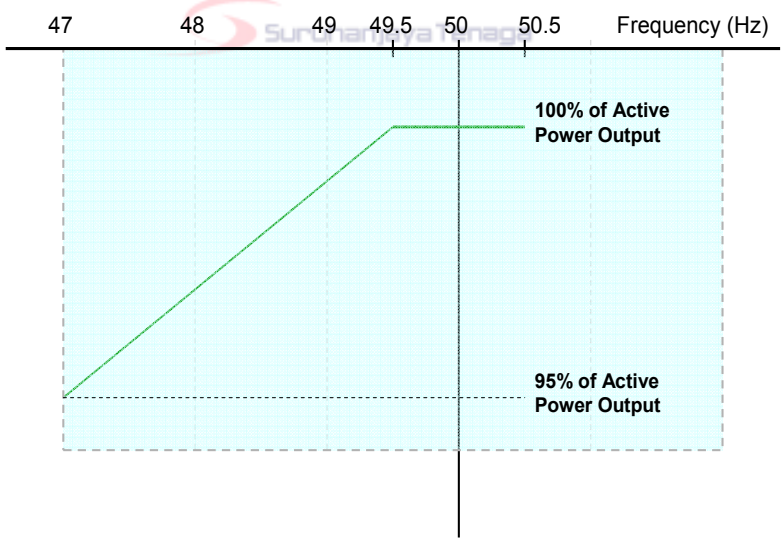

CC6.4.2.3 The Active Power output under steady state conditions of any Generating Unit directly connected to the Grid System should not be affected by voltage changes in the normal operating range specified in paragraph CC6.2.4. The Reactive Power output under steady state conditions should be fully available within the voltage range (± 5)% at 500kV, 275kV and 132kV and lower voltages.

CC6.4.3 Black Start Capability

CC6.4.3.1 It is an essential requirement that the Transmission System must incorporate a Black Start Capability. This will be achieved by identifying a number of strategically located Power Stations where such Black Start Capability is required. The Grid Owner and GSO shall do the identification in consultation with the User. In this respect, Black Start Capability relates to any one Generating Unit in a Power Station having the capability to start without any other backfeed supply whatsoever being available from the Grid System and/or Distribution System or from User System and subsequently the ability to start other Generating Units in the Power Station.

CC6.4.4 Control Arrangements

CC6.4.4.1 Each Generating Unit must be capable of contributing to Frequency and Voltage control by continuous modulation of Active Power and Reactive Power supplied to the Transmission System or the User System in which it is Embedded.

CC6.4.4.2 Each Generating Unit must be fitted with a fast acting proportional turbine speed governor and unit load controller or equivalent control device to provide Frequency response under normal operational conditions in accordance with Scheduling and Dispatch Code 3 (SDC3). The governor must be designed and operated to the appropriate Technical Specification acceptable to the Grid Owner and GSO including:

(a) relevant Malaysian Specification;
(b) relevant International Specification; and
(c) any other specification in common use acceptable to the Grid Owner and GSO;

at the time when the installation was designed or when the modification or alteration was designed.

CC6.4.4.3 The specification or other standard utilised in accordance with sub-paragraph CC6.4.4.2 (a) or (b) will be notified to the Grid Owner and GSO as part of the application for a Connection or as soon as possible prior to any modification or alteration to the governor.

CC6.4.4.4 The speed governor in co-ordination with other control devices must control the Generating Unit Active Power Output with stability over the entire operating range of the Generating Unit.

CC6.4.4.5 The speed governor must meet the following minimum requirements:

(a) where a Generating Unit becomes isolated from the rest of the Grid System but is still supplying Customers, the speed governor must also be able to control System Frequency to below 52Hz unless this causes the Generating Unit to operate below its Designed Minimum Operating Level when it is possible that it may, as detailed in SDC3.7.2, trip after a time.

(b) the speed governor for the Steam Units and CCGT Modules must be capable of being set so that it operates with an overall speed droop of between 3% and 5%. Lower droop setting capability may be specified for Hydro Units by the Grid Owner and GSO.

(c) in the case of all Generating Units other than the Steam Unit within a CCGT Module the speed governor deadband should be adjustable as agreed with the GSO but with a minimum value no greater than 0.05Hz (for the avoidance of doubt, ±0.025Hz). In the case of the Steam Unit within a CCGT Module, the speed governor deadband should be set to an appropriate value consistent with the requirements of CC6.4.4.5(a) and the requirements of SDC3.4.4 for the provision of High Frequency Response.

CC6.4.4.6 A facility to modify the Target Frequency setting either continuously or in a maximum of 0.05 Hz steps over at least the range 50 ± 0.1 Hz should be provided in the unit load controller or equivalent device so as to fulfill the requirements of the Scheduling and Dispatch Codes.

CC6.4.4.7 Each Generating Unit and/or CCGT Module must be capable of meeting the minimum frequency response requirement profile subject to and in accordance with the provisions of Appendix 3.

CC6.4.4.8 A continuously-acting, static type, fast response automatic excitation control system, with Power System Stabiliser (PSS), is required to provide constant terminal voltage control of the Generating Unit without instability over the entire operating range of the Generating Unit. There is a requirement on the Generator to allow the Grid Owner and GSO to witness commissioning tests. The automatic excitation control system shall remain in service at all times and shall not be removed or disabled from service without prior consent of the GSO.

CC6.4.4.9 In particular, other control facilities, including constant Reactive Power output control modes and constant power factor control modes (but excluding VAR limiters) are not required. However, if present in the excitation system they will be disabled unless otherwise agreed by written permission of the GSO. Operation of such control facilities will be in accordance with the provisions contained in SDC2. For the avoidance of doubt the Generating Unit shall not be operated under constant Reactive Power or constant power factor or any other specific control mode whatsoever without specific consent of the GSO at any time.

CC6.4.4.10 The excitation system shall also be equipped with a Power System Stabilizer (PSS) which must be capable of damping of power system oscillations over the frequency range of 0.1 to 5.0 Hz. The PSS shall be optimally tuned to damp out local and inter area oscillation modes with a Damping Ratio of not less than 5% while maintaining sufficient stability margins of the excitation control system. The Generator shall seek written advice from the Grid Owner and GSO, on the values of the inter-area oscillation frequencies for which the PSS shall be tuned at the Preliminary Project Data stage as defined in the Planning Code.

CC6.4.4.11 The Generator shall before Commercial Operation Date of each Generating Unit, prove conclusively to the Grid Owner and GSO that the PSS for the Generating Unit is optimally tuned to damp out the local and inter area oscillation modes, both analytically and by on site verification tests, including actual line switching test. The Generator shall submit the PSS tuning study report to the Grid Owner and GSO at least three (3) months before commissioning of the Generating Unit.

CC6.4.4.12 The control arrangements provided for Frequency and Voltage control shall continue to operate stably during disturbances experienced by the Grid System without inadvertently tripping the turbine and/or prime mower or the Generator and disconnecting it from the Grid System.

CC6.4.5 Automatic Generation Control (AGC) and Load Following Capability

CC6.4.5.1 Load Following on the Transmission System shall be carried out automatically using Automatic Generation Control (AGC) control facilities at the NLDC. Unless otherwise specified by the GSO all Generating Units shall be equipped with appropriate plant controllers enabling AGC or automatic adjustment of generator output for Load Following purposes. The AGC shall be via the transmittal of a "desired generation output" signal from the NLDC and the plant controller will adjust the generator output accordingly. The Load Following assigned by the NLDC shall be shared by all Generating Units operating at the Power Station.

CC6.4.5.2 Each Power Station shall be designed to enable each Generating Unit to be capable of Load Following over the whole range between the Minimum Load and the Registered Capacity of the Generating Unit. Load Following capability includes the following control actions by the Generating Unit:

(a) following a pre-set generation schedule;
(b) executing a Dispatch Instruction;
(c) performing AGC duties for the purpose of Load Following in the Grid System within a range of output (minimum and maximum values) agreed by the GSO, the Generator and the Single Buyer. The details on the facilities to affect this control capability shall be in accordance to the requirement stipulated in the relevant Agreement.

CC6.4.5.3 The use of AGC shall not cause any restriction whatsoever on the operation of governors or equivalent control devices on the Generating Units and vice versa.

CC6.4.6 Dispatch Inaccuracies

CC6.4.6.1 The standard deviation of Load error at steady state Load over a thirty (30) minute period must not exceed (2.5)% of a Centrally Dispatched Generating Unit's or CD CCGT Module's capacity in accordance with its Availability Declaration. Where a Centrally Dispatched Generating Unit or a CCGT Unit within a CD CCGT Module is instructed to Frequency sensitive operation, allowance will be made in determining whether there has been a dispatch error according to the governor droop characteristic registered under OC4.

CC6.4.7 Negative Phase Sequence Loadings

CC6.4.7.1 In addition to meeting the conditions specified in CC6.2.5.1(b), each Generating Unit will be required to withstand, without tripping, the negative phase sequence loading incurred by clearance of a close-up phase-to-phase fault, by System Back-Up Protection on the Transmission System or User System in which it is Embedded.

CC6.4.8 Neutral Earthing

CC6.4.8.1 At nominal System voltages of 132kV and above the higher voltage windings of a transformer of a Generating Unit must be star connected with the star point suitable for connection to earth. The Earthing and lower voltage winding arrangement shall be such as to ensure that the Earth Fault Factor requirement of paragraph CC6.3.2.2 will be met on the Transmission System at nominal System voltages of 132kV and above. Under single-phase-to-earth or two-phase-to earth fault conditions the rated frequency component of voltage could respectively fall transiently to zero on one or two phases or rise to 140 percent of phase-to-earth voltage.

CC6.4.8.2 For connections to the Grid System at nominal system voltages of below 132kV, the Earthing requirements and voltage rise conditions will be advised by the GSO as soon as practicable prior to connection.

CC6.4.9 Frequency Sensitive Relays

CC6.4.9.1 As stated in CC6.2.3.2, the System Frequency could rise to 52Hz or fall to 47Hz. Each Generating Unit must continue to operate within this Frequency range for at least the periods of time given in CC6.2.3.2.

CC6.4.9.2 Each Generating Unit in a Power Station shall be equipped with appropriate under frequency relays. The relays shall be set to trip the high voltage circuit breakers when the Frequency of the Grid System reaches 47.0 Hz or when the frequency sustains at 47.5Hz or lower for at least ten (10) seconds. The Generating Unit shall successfully go to House Load Operation as a result of such tripping. The relay shall be located within the Power Station. The relaying scheme shall comply with the Grid Owner's System Protection and Control Code of Practice.

CC6.4.9.3 Generators will be responsible for protecting all their Generating Units against damage should Frequency excursions outside the range 52Hz to 47Hz ever occur. Should such excursions occur, it is up to the Generator to decide whether to disconnect his Apparatus for reasons of safety of Apparatus, Plant and/or personnel.

CC6.4.9.4 It may be agreed in the relevant Agreement that a Dispatch Unit shall have a Fast-Start Capability. Such Dispatch Units may be used for Operating Reserve and their Start-Up may be initiated by Frequency-level relays with settings in the range 49Hz to 50Hz as specified pursuant to OC4.

CC6.4.10 House Load Operation

CC6.4.10.1 In the event of an abrupt de-energisation of the Interconnecting Connections, system disturbance or when there is complete Isolation between the Power Station and the Grid System (including disconnection of grid supply from the plant auxiliary systems), each Generating Unit shall be capable of performing House Load Operation up to a maximum of two (2) hours. Within such time, each Generating Unit shall be ready to be re-synchronised to the Grid System and able to increase output in the usual manner. House Load Operation capability shall be completely independent from the availability of supply from the Grid System.

CC6.4.11 Unit Start for Active Power Reserve

CC6.4.11.1 The GSO shall specify the requirements for Generating Unit cold, warm and hot start for the provision of Active Power Reserve in consultation with the Generator for suitable incorporation in the relevant agreements by the Single Buyer. .

CC6.4.11.2 The Facility shall be capable of the following starting regimes:
(a) Cold start;
(b) Warm start; and
(c) Hot start.

CC6.4.12 Dispatch Ramp Rate

CC6.4.12.1 The GSO shall specify the requirements for Generating Unit Dispatch Ramp Rate in consultation with the Generator for suitable incorporation in the relevant agreements by the Single Buyer at the time of a connection application.

CC6.4.13 Primary and Stand-by Fuel Stock

CC6.4.13.1 The GSO shall specify the requirements for the Power Station Primary, Alternate and/or Stand-by Fuel Stock in consultation with the Generator for suitable incorporation in the relevant agreements by the Single Buyer. This is to ensure that fuel stock obligations placed on the Electricity Industry are met. The requirements shall be defined in terms of the storage capacity and the stock level that should be maintained and included in the relevant Agreement.

CC6.4.14 On-Line Fuel Changeover

CC6.4.14.1 The GSO shall specify the requirements for On-Line Fuel Changeover at the Power Station and individual Generating Units within a Power Station in consultation with the Generator and the Single Buyer for suitable incorporation in the relevant agreements at the time of a connection application to ensure the fuel changeover performance requirements are adequately met. These shall be included in the relevant Agreement.

CC6.4.14.2 A Power Station for which the Nominated Fuel is natural gas shall be capable of performing On-line Fuel Changeover when the gas pressure drops within the safe operating limits and must be able to do a staggered On-line Fuel Changeover from natural gas to the Stand-by Fuel and the changeover shall be automatic. Changeover from Stand-by Fuel back to the Nominated Fuel shall also be on-line and the changeover is manual.

CC6.4.15 Loss of AC Power Supply

CC6.4.15.1 Each Generating Unit in a Power Station shall not trip if the AC power supply to the auxiliary systems is lost for up to 600 milliseconds.

CC6.4.16 Generator and Power Station Monitoring Equipment

CC6.4.16.1 The Grid Owner and GSO shall install specific monitoring equipment at the substation and or within the Power Station where the Power Station is located. The specification and the specific plant parameters of this equipment enabling the Grid Owner and GSO to monitor the dynamic behaviour of the plant during normal and disturbed system operation shall be provided in the relevant Agreement and the installation shall be in accordance with the Grid Owner's System Protection and Control Code of Practice. The monitoring equipment installed shall be capable of recording both slow and fast events with the appropriate resolution levels to enable meaningful and appropriate post event analysis to be carried out.

CC6.4.16.2 The GSO shall make the recordings from such equipment available to any joint investigation of system incidents and investigations of incidents where unexpected Generator behaviour has been observed.

CC6.4.17 Special Provisions for Hydro and Induction Generators

CC6.4.17.1 Hydro generation may be required to provide synchronous condenser mode of operation by the GSO as included in the relevant Agreement.

CC6.4.17.2 If the Generating Plant includes induction type generator(s), the Generator shall provide power factor correction means so that the Generating Plant will neither normally demand reactive power from, nor supply reactive power to, the Grid System. The power factor correction equipment may be installed by the Generator at his Plant as required by the Grid Owner and GSO. The Grid Owner and GSO shall have the right to review the Generator's power factor correction plant and to require modifications to or additions as needed, in the Grid Owner and GSO's opinion, to maintain the Grid System integrity.

CC6.4.18 Requirements to conduct test

CC6.4.18.1 Generators shall be responsible for carrying out tests to prove compliance on the requirements stated in this CC.

CC6.4.18.2 All tests shall meet at least the requirements stated in OC10.

CC6.5 General Requirements for Distributors, Network Operators and Directly Connected Customers

CC6.5.1 Introduction

CC6.5.1.1 This part of the Grid Code describes the technical and design criteria and performance requirements for Distributors, Directly Connected Customers, and Network Operators.

CC6.5.2 Neutral Earthing

CC6.5.2.1 At nominal System voltages of 132kV and above the higher voltage windings of three phase transformers and transformer banks connected to the Transmission System must be star connected with the star point suitable for connection to earth. The Earthing and lower voltage winding arrangement shall be such as to ensure that the Earth Fault Factor requirement of paragraph CC6.3.2.2 will be met on the Transmission System at nominal System voltages of 132kV and above.

CC6.5.2.2 For connections to the Grid System at nominal system voltages of below 132kV, the Earthing requirements and voltage rise conditions will be advised by the GSO as soon as practicable prior to connection.

CC6.5.3 Frequency Sensitive Relays

CC6.5.3.1 As explained under OC6, each Distributor, Directly Connected Customer, and Network Operator, shall make arrangements that will facilitate automatic low Frequency disconnection of Demand (based on Annual Peak Demand Conditions). The relevant Agreement will specify the manner in which Demand subject to low Frequency disconnection will be split into discrete MW blocks with associated Low Frequency Relay settings. Typical technical requirements relating to Low Frequency Relays are listed in Appendix 4. The Grid Owner in consultation with the GSO shall specify the detailed characteristics of the Low Frequency Relays to be utilised for implementing the automatic low Frequency disconnection of Demand in accordance with the Grid System Requirement.

CC6.6 Communications Plant and Apparatus

CC6.6.1 Introduction

CC6.6.1.1 In order to ensure control of the Grid System, telecommunications between Users and the GSO must, if required by the GSO, be established in accordance with the requirements set down below.

CC6.6.2 Control Telephony

CC6.6.2.1 Control Telephony is the method by which a User's Responsible Engineer/Operator and the GSO Control Engineers speak to one another for the purposes of control of the Total System in both normal and emergency operating conditions. Control Telephony provides secure point to point telephony for routine Control Calls, priority Control Calls and emergency Control Calls.

CC6.6.2.2 Supervisory tones indicate to the calling and receiving parties dial, engaged, ringing, secondary engaged (signifying that priority may be exercised) and priority disconnect tones.

CC6.6.2.3 Where the GSO requires Control Telephony, Users are required to use the Control Telephony with the GSO in respect of all Connection Points with the Grid System and in respect of all Embedded Generating Plant. The User will install Control Telephony to the GSO's specification where the User's telephony equipment is not capable of providing the required facilities or is otherwise incompatible with the GSO Control Telephony. Details of and relating to the Control Telephony required are contained in the relevant Agreement.

CC6.6.2.4 Detailed information on Control Telephony facilities and suitable equipment required for individual User applications will be provided by the GSO upon request.

CC6.6.3 Operational Metering

CC6.6.3.1 The User shall provide System Control and Data Acquisition (SCADA) outstation interface equipment. The User shall provide such voltage, current, Frequency, Active Power and Reactive Power measurement outputs and plant status indications and alarms to the SCADA outstation interface equipment as required by the GSO in accordance with the terms of the relevant Agreement.

CC6.6.3.2 For the avoidance of doubt, for Active Power and Reactive Power measurements, circuit breaker and disconnector status indications from all Power Stations, the outputs and status indications must each be provided to the GSO on an individual Generating Unit basis. In addition, where identified in the relevant Agreement, Active Power and Reactive Power measurements from unit and/or station transformers must be provided.

CC6.6.4 Instructor Facilities

CC6.6.4.1 The User shall provide and accommodate Instructor Facilities as specified by the GSO for the receipt of operational messages relating to System conditions.

CC6.6.5 Data Entry Terminals

CC6.6.5.1 The User shall provide and accommodate Data Entry Terminals as specified by the GSO at points for the purposes of information exchange with the GSO.

CC6.6.6 Facsimile Machines

CC6.6.6.1 Each User shall provide and maintain a facsimile machine or machines:-

(a) in the case of Generators, at the Control Point of each Power Station and at its Control Centre (if any);

(b) in the case of Network Operators, at the Control Centre(s); and

(c) in the case of Directly Connected Customers at the Control Point.

CC6.6.6.2 Each User, prior to connection to the System of the User's Plant and Apparatus, shall notify the GSO of its or their telephone number or numbers, and will notify the GSO of any changes thereafter. Prior to connection to the System of the User's Plant and Apparatus, or submission of an offer for a Demand Reduction Block for which it is responsible, as the case may be, the GSO shall notify each User of the telephone number or numbers of its facsimile machine or machines and will notify any changes thereafter.

CC6.6.7 Busbar Voltage

CC6.6.7.1 The Grid Owner shall, subject as provided below, provide each Generator at each Grid Entry Point where its Generating Plant is connected with appropriate voltage signals to enable the Generator to obtain the necessary information to synchronise its Generating Units or Centrally Dispatched CCGT Modules to the Grid System.

CC6.7 System Monitoring

CC6.7.1 Monitoring equipment is provided on the Grid System to enable the GSO to monitor the Power System dynamic performance conditions. Where this monitoring equipment requires generator parameter signals from the User, the GSO will inform the User and they will be provided by the User with both the timing of the installation of the equipment for receiving such signals and its exact position being agreed pursuant to the terms of the relevant Agreement.

CC7 Site Related Conditions

CC7.1 General

CC7.1.1 In the absence of agreement between the parties to the contrary, construction, commissioning, control, operation and maintenance responsibilities follow ownership.

CC7.2 Responsibilities for Safety

CC7.2.1 Any User entering and working on its Plant and/or Apparatus on a Grid Owner's Site will work to the TNB Transmission Safety Rules.

CC7.2.2 The Grid Owner entering and working on its Plant and/or Apparatus on a User Site will work to the User's Safety Rules.

CC7.2.3 A User may, with a minimum of six (6) weeks notice, apply to the Grid Owner for permission to work according to that Users own Safety Rules when working on its Plant and/or Apparatus on the Grid Owner Sites rather than that of the Grid Owner. If the Grid Owner is of the opinion that the User's Safety Rules provide for a level of safety commensurate with that of the TNB Transmission Safety Rules, it will notify the User, in writing, that, with effect from the date requested by the User, the User may use its own Safety Rules when working on its Plant and/or Apparatus on the Grid Owner's sites. Until receipt of such written approval from the Grid Owner, the User will continue to use the TNB Transmission Safety Rules.

CC7.2.4 The Grid Owner may, with a minimum of six (6) weeks notice, apply to a User for permission to work according to Safety Rules of TNB Transmission when working on its Plant and/or Apparatus on that User's Sites, rather than the User's Safety Rules. If the User is of the opinion that Safety Rules of the Grid Owner provide for a level of safety commensurate with that of User's Safety Rules, it will notify the Grid Owner, in writing, that with effect from the date requested by the Grid Owner, the Grid Owner may use its own Safety Rules when working on its Plant and/or Apparatus on that User's Sites. Until receipt of such written approval from the User, the Grid Owner will continue to use the User's Safety Rules.

CC7.2.5 If the Grid Owner gives its approval for the User's Safety Rules to apply when working on its Plant and/or Apparatus, that does not imply that the User's Safety Rules will apply to entering the Grid Owner's Site and access to the User's Plant and/or Apparatus on that Grid Owner Site. Bearing in mind the Grid Owner's responsibility for the whole Site, entry and access will always be in accordance with the Grid Owner's site access procedures.

CC7.2.6 If a User gives its approval for the TNB Transmission Safety Rules to apply when working on its Plant and/or Apparatus, that does not imply that the TNB Transmission Safety Rules will apply to entering the User Site and access to the Grid Owner's Plant and/or Apparatus on that User Site. Bearing in mind a User's responsibility for the whole User Site, entry and access will always be in accordance with the User's site access procedures.

CC7.2.7 Users and the Grid Owner shall notify each other of any Safety Rules that apply to the other's staff working on its Connection Sites.

CC7.2.8 Each Site Responsibility Schedule must have recorded on it the Safety Rules which apply to each item of Plant and/or Apparatus.

CC7.3 Site Responsibility Schedules

CC7.3.1 In order to inform site operational staff and GSO Control Engineers of agreed responsibilities for Plant and/or Apparatus at the operational interface, a Site Responsibility Schedule shall be produced for the Grid Owner and Users with whom they interface.

CC7.3.2 The format, principles and basic procedure to be used in the preparation of Site Responsibility Schedules are set down in Appendix 1.

CC7.4 Operation and Gas Zone Diagrams

CC7.4.1 Operation Diagrams

CC7.4.1.1 An Operation Diagram shall be prepared for each Connection Site at which a Connection Point exists using, where appropriate, the graphical symbols shown in Part 1A of Appendix 2. Users should also note that the provisions of OC11 apply in certain circumstances.

CC7.4.1.2 The Operation Diagram shall include all HV Apparatus and the connections to all external circuits and incorporate numbering, nomenclature and labelling, as set out in OC9. At those Connection Sites where gas-insulated metal enclosed switchgear and/or other gas-insulated HV Apparatus is installed, those items must be depicted within an area delineated by a chain dotted line which intersects gas-zone boundaries. The nomenclature used shall conform to that used on the relevant Connection Site and circuit. The Operation Diagram (and the list of technical details) is intended to provide an accurate record of the layout and circuit interconnections, ratings and numbering and nomenclature of HV Apparatus and related Plant.

CC7.4.1.3 A non-exhaustive guide to the types of HV Apparatus to be shown in the Operation Diagram is shown in Part 2 of Appendix 2, together with certain basic principles to be followed unless equivalent principles are approved by the GSO.

CC7.4.2 Gas Zone Diagrams

CC7.4.2.1 A Gas Zone Diagram shall be prepared for each Connection Site at which a Connection Point exists where gas-insulated switchgear and/or other gas-insulated HV Apparatus is utilised. They shall use, where appropriate, the graphical symbols shown in Part 1B of Appendix 2.

CC7.4.2.2 The nomenclature used shall conform to that used in the relevant Connection Site and circuit.

CC7.4.2.3 The basic principles set out in Part 2 of Appendix 2 shall be followed in the preparation of Gas Zone Diagrams unless equivalent principles are approved by the Grid Owner.

CC7.4.3 Preparation of Operation and Gas Zone Diagrams for User's Sites

CC7.4.3.1 In the case of a User Site, the User shall prepare and submit to the GSO and the Grid Owner, an Operation Diagram for all HV Apparatus on the User side of the Connection Point and the Grid Owner shall provide the User with an Operation Diagram for all HV Apparatus on the Grid Owner side of the Connection Point, in accordance with the timing requirements of the relevant Agreement prior to the Completion Date under the relevant Agreement.

CC7.4.3.2 The User will then prepares, produce and distribute, using the information submitted on the User's Operation Diagram and the Grid Owner Operation Diagram, a composite Operation Diagram for the complete Connection Site, also in accordance with the timing requirements of the relevant Agreement.

CC7.4.3.3 The provisions of CC7.4.3.1 and CC7.4.3.2 shall apply in relation to Gas Zone Diagrams where gas-insulated switchgear and/or other gas-insulated HV Apparatus is utilised.

CC7.4.4 Preparation of Operation and Gas Zone Diagrams for Grid Owner's Sites

CC7.4.4.1 In the case of a Grid Owner's Site, the User shall prepare and submit to the GSO and the Grid Owner an Operation Diagram for all HV Apparatus on the User side of the Connection Point, in accordance with the timing requirements of the relevant Agreement.

CC7.4.4.2 The Grid Owner will then prepare, produce and distribute, using the information submitted on the User's Operation Diagram, a composite Operation Diagram for the complete Connection Site, also in accordance with the timing requirements of the relevant Agreement.

CC7.4.4.3 The provisions of CC7.4.10 and CC7.4.11 shall apply in relation to Gas Zone Diagrams where gas-insulated switchgear and/or other gas-insulated HV Apparatus is utilised.

CC7.4.5 Changes to Operation and Gas Zone Diagrams

CC7.4.5.1 When the Grid Owner has decided that it wishes to install new HV Apparatus or it wishes to change the existing numbering or nomenclature of its HV Apparatus at its own Site, it will (unless it gives rise to a Modification under the relevant Agreement, in which case the provisions of the relevant Agreement as to the timing apply) one (1) month prior to the installation or change, send to each such User a revised Operation Diagram of that Site, incorporating the new HV Apparatus to be installed and its numbering and nomenclature or the changes, as the case may be. OC11 is also relevant to certain Apparatus.

CC7.4.5.2 When a User has decided that it wishes to install new HV Apparatus, or it wishes to change the existing numbering or nomenclature of its HV Apparatus at its User Site, the User will (unless it gives rise to a Modification under the relevant Agreement, in which case the provisions of the relevant Agreement as to the timing apply) one (1) month prior to the installation or change, send to the Grid Owner, a revised Operation Diagram of that User Site incorporating the new User HV Apparatus to be installed and its numbering and nomenclature or the changes as the case may be. OC11 is also relevant to certain Apparatus.

CC7.4.5.3 The provisions of CC7.4.5.1 and CC7.4.5.2 shall apply in relation to Gas Zone Diagrams where gas-insulated switchgear and/or other gas-insulated HV Apparatus are installed.

CC7.4.6 Validity

CC7.4.6.1 The composite Operation Diagram prepared by the Grid Owner or the User, as the case may be, will be the definitive Operation Diagram for all operational and planning activities associated with the Connection Site. If a dispute arises as to the accuracy of the composite Operation Diagram, a meeting shall be held at the Connection Site, as soon as reasonably practicable, between the Grid Owner and the User, to endeavour to resolve the matters in dispute.

CC7.4.6.2 An equivalent rule shall apply for Gas Zone Diagrams where they exist for a Connection Site.

CC7.5 Site Common Drawings

CC7.5.1 Introduction

CC7.5.1.1 Site Common Drawings will be prepared for each Connection Site and will include Connection Site layout drawings, electrical layout drawings, common Protection/control drawings and common services drawings.

CC7.5.2 Preparation of Site Common Drawings for User Site and Grid Owner Site

CC7.5.2.1 In the case of a User Site, the Grid Owner shall prepare and submit to the User, Site Common Drawings for the his side of the Connection Point in accordance with the timing requirements of the relevant Agreement.

CC7.5.2.2 Based on the above, the User shall then prepare, produce and distribute Site Common Drawings for the complete Connection Site in accordance with the timing requirements of the relevant Agreement.

CC7.5.2.3 In the case of a Grid Owner Site, the User will prepare and submit to the Grid Owner, Site Common Drawings for the User side of the Connection Point in accordance with the timing requirements of the relevant Agreement.

CC7.5.2.4 Based on this, the Grid Owner shall then prepare, produce and distribute Site Common Drawings for the complete Connection Site in accordance with the timing requirements of the relevant Agreement.

CC7.5.3 Changes to Site Common Drawings

CC7.5.3.1 When a User becomes aware that it is necessary to change any aspect of the Site Common Drawings at a Connection Site it will:

(a) if it is a User Site, as soon as reasonably practicable, prepare, produce and distribute revised Site Common Drawings for the complete Connection Site; and

(b) if it is the Grid Owner Site, as soon as reasonably practicable, prepare and submit to the Grid Owner, revised Site Common Drawings for the User side of the Connection Point. Based on this. The Grid Owner will as soon as reasonably practicable, prepare, produce and distribute, revised Site Common Drawings for the complete Connection Site.

In either case, if in the User's reasonable opinion the change can be dealt with by it notifying the Grid Owner in writing of the change and for each party to amend its copy of the Site Common Drawings (or where there is only one set, for the party holding that set to amend it), then it shall so notify and each party shall so amend. If the change gives rise to a Modification under the relevant Agreement, the provisions of the relevant Agreement as to timing will apply.

CC7.5.3.2 When the Grid Owner becomes aware that it is necessary to change any aspect of the Site Common Drawings at a Connection Site it will:

(a) if it is the Grid Owner Site, as soon as reasonably practicable, prepare, produce and distribute revised Site Common Drawings for the complete Connection Site; and

(b) if it is a User Site, as soon as reasonably practicable, prepare and submit to the User, revised Site Common Drawings for the Grid Owner side of the Connection Point. Based on this, the User will as soon as reasonably practicable, prepare, produce and distribute, revised Site Common Drawings for the complete Connection Site.

In either case, if in the Grid Owner's reasonable opinion the change can be dealt with by it notifying the User in writing of the change and for each party to amend its copy of the Site Common Drawings (or where there is only one set, for the party holding that set to amend it), then it shall so notify and each party shall so amend. If

the change gives rise to a Modification under the relevant Agreement, the provisions of the relevant Agreement as to timing will apply.

CC7.5.4 Validity

CC7.5.4.1 The Site Common Drawings for the complete Connection Site prepared by the User or the Grid Owner, as the case may be, will be the definitive Site Common Drawings for all operational and planning activities associated with the Connection Site. If a dispute arises as to the accuracy of the Site Common Drawings, a meeting shall be held at the Site, as soon as reasonably practicable, between the Grid Owner and the User, to endeavour to resolve the matters in dispute.

CC7.6 Access

CC7.6.1 The provisions relating to access to the Grid Owner's Sites by Users, and to User's Sites by the Grid Owner, is set out in each relevant Agreement.

CC7.6.2 In addition to those provisions, where a Grid Owner Site contains exposed HV conductors, unaccompanied access will only be granted to individuals holding an Authority for Access issued by the Grid Owner.

CC7.6.3 The procedure for applying for an Authority for Access is contained in the relevant Agreement.

CC7.6.4 Arrangements will be provided so that the Grid Owner and GSO on giving prior notice and reasons for the visit may have access to the Generator's facilities and metering equipment at any time.

CC7.7 Maintenance Standards

CC7.7.1 It is a requirement that all User's Plant and Apparatus on the Grid Owner Sites is maintained adequately for the purpose for which it is intended and to ensure that it does not pose a threat to the safety of any of the Grid Owner's Plant or Apparatus or personnel on the Grid Owner Site. The Grid Owner will have the right to inspect the test results and maintenance records relating to such Plant and Apparatus at any time.

CC7.7.2 It is a requirement that all the Grid Owner's Plant and Apparatus on User's Sites is maintained adequately for the purposes for which it is intended and to ensure that it does not pose a threat to the safety of any of the User's Plant, Apparatus or personnel on the User Site. Users will have the right to inspect the test results and maintenance records relating to such Plant and Apparatus, at any time.

CC7.8 Site Operational Procedures

CC7.8.1 The Grid Owner and Users with an interface with the Grid Owner must make available staff to take necessary Safety Precautions and carry out operational duties as may be required to enable work/testing to be carried out and for the operation of Plant and Apparatus connected to the Total System.

<End of the Connection Code Main Text>

Connection Code Appendix 1 – Format, Principles and Basic Procedure to be used for Preparation of Site Responsibility Schedules

CCA.1.1 Principles

CCA.1.1.1 At all Complexes the following Site Responsibility Schedules shall be drawn up using the proforma attached or with such variations as may be agreed between the Grid Owner and Users, and in the absence of agreement the proforma attached will be used:

(a) Schedule of HV Apparatus;
(b) Schedule of Plant, LV/MV Apparatus, services and supplies;
(c) Schedule of telecommunications and measurements Apparatus.

Other than at Generating Unit and Power Station locations, the schedules referred to in (b) and (c) may be combined.

CCA.1.1.2 Each Site Responsibility Schedule for a Connection Site shall be prepared by the Grid Owner in consultation with other Users at least two (2) weeks prior to the Completion Date under the relevant Agreement for that Connection Site (which may form part of a Complex). Each User shall, in accordance with the timing requirements of the relevant Agreement, provide information to the Grid Owner to enable it to prepare the Site Responsibility Schedule.

CCA.1.1.3 Each Site Responsibility Schedule will be subdivided to take account of any separate Connection Sites on that Complex.

CCA.1.1.4 Each Site Responsibility Schedule shall detail for each item of Plant and Apparatus;

(a) Plant/Apparatus ownership;
(b) Site Manager (Controller);
(c) Safety (applicable Safety Rules and Control Person or other responsible person (Safety Coordinator), or such other person who is responsible for safety);
(d) Operations (applicable Operational Procedures and control engineer); and
(e) Responsibility to undertake maintenance.

Each Connection Point shall be precisely shown.

CCA.1.1.5 In the case of Site Responsibility Schedules referred to in CCA.1.1.1(b) and (c), with the exception of Protection Apparatus and Intertrip Apparatus operation, it will be sufficient to indicate the responsible User or the Grid Owner, as the case may be. In the case of the Site Responsibility Schedule referred to in CCA.1.1.1(a) for Protection Apparatus and Intertrip Apparatus, the responsible management unit must be shown in addition to the User or the Grid Owner, as the case may be.

CCA.1.1.6 The HV Apparatus Site Responsibility Schedule for each Connection Site must include lines and cables emanating from the Connection Site.

CCA.1.1.7 Every page of each Site Responsibility Schedule shall bear the date of issue and the issue number.

CCA.1.1.8 When a Site Responsibility Schedule is prepared it shall be sent by the Grid Owner to the Users involved for confirmation of its accuracy.

CCA.1.1.9 The Site Responsibility Schedule shall then be signed on behalf of the Grid Owner by the Area Manager responsible for the area in which the Complex is situated and on behalf of each User involved by its Responsible Manager (see CCA.1.2.4), by way of written confirmation of its accuracy.

CCA.1.1.10 Once signed, two copies will be distributed by the Grid Owner, not less than two (2) weeks prior to its implementation date, to each User which is a party on the Site Responsibility Schedule, accompanied by a note indicating the issue number and the date of implementation.

CCA.1.1.11 The Grid Owner and Users must make the Site Responsibility Schedules readily available to its operational staff at the Complex.

CCA.1.2 Alterations to Existing Site Responsibility Schedules

CCA.1.2.1 Without prejudice to the provisions of CCA.1.2.4, when a User identified on a Site Responsibility Schedule becomes aware that an alteration is necessary, it must inform the Grid Owner immediately and in any event eight (8) weeks prior to any change taking effect (or as soon as possible after becoming aware of it, if less than eight (8) weeks remain when the User becomes aware of the change).

CCA.1.2.2 Where the Grid Owner has been informed of a change by a User, or itself proposes a change, it will prepare a revised Site Responsibility Schedule by not less than six (6) weeks prior to the change taking effect (subject to it having been informed or knowing of the change eight (8) weeks prior to that time) and the procedure set out in CCA.1.1.8 shall be followed with regard to the revised Site Responsibility Schedule.

CCA.1.2.3 The revised Site Responsibility Schedule shall then be signed in accordance with the procedure set out in CCA.1.1.9 and distributed in accordance with the procedure set out in CCA.1.1.10, accompanied by a note indicating where the alteration(s) has/have been made, the new issue number and the date of implementation.

CCA.1.2.4 When a User identified on a Site Responsibility Schedule, or the Grid Owner, as the case may be, becomes aware that an alteration to the Site Responsibility Schedule is urgently necessary to reflect, for example, an emergency situation, the User shall notify the Grid Owner, or the Grid Owner shall notify the User, as the case may be, immediately and will discuss:

(a) what change is necessary to the Site Responsibility Schedule; and

(b) whether the Site Responsibility Schedule is to be modified temporarily or permanently;

before the distribution of the revised Site Responsibility Schedule.

The Grid Owner will prepare a revised Site Responsibility Schedule as soon as possible and in any event within seven (7) days of it being informed of or knowing the necessary alteration. The Site Responsibility Schedule will be confirmed by Users and signed on behalf of the Grid Owner and Users (by the persons referred to in CCA.1.1.9) as soon as possible after it has been prepared and sent to Users for confirmation.

CCA.1.3 Responsible Managers

CCA.1.3.1 Each User shall, prior to the Completion Date under each relevant Agreement, supply to the Grid Owner a list of Managers who have been duly authorised to sign Site Responsibility Schedules on behalf of the User ("Responsible Manager") and the Grid Owner shall, prior to the Completion Date under each relevant Agreement, supply to that User the name of the Area Manager responsible for the area in which the Complex is situated and each shall supply to the other User any changes to such list six (6) weeks before the change takes effect where the change is anticipated, and as soon as possible after the change, where the change was not anticipated.

Appendix 1 – cont'd

ATTACHMENT TO APPENDIX 1 OF CONNECTION CODE
PROFORMA FOR SITE RESPONSIBILITY SCHEDULE

Area:_____

Complex: _____ Schedule: _____

Connection Site: _____

Item of Plant/ Apparatus	Plant /Apparatus Owner	Site Manager	Safety		Operations		Party Responsible for Undertaking Statutory Inspections, Fault Investigations & Maintenance	Remarks
			Safety Rules	Control or Other Responsible Person (Safety Coordinator)	Operational Procedures	Control or Other Responsible Engineer		

Page: _____ Issue No: _____ Date: _____

ATTACHMENT TO APPENDIX 1 OF CONNECTION CODE
PROFORMA FOR SITE RESPONSIBILITY SCHEDULE

Area_____

Complex: _____ Schedule : _____

Connection Site: _____

Item of Plant/ Apparatus	Plant /Apparatus Owner	Site Manager	Safety		Operations		Item of Plant/ Apparatus	Plant /Apparatus Owner
			Safety Rules	Control or Other Responsible Person (Safety Coordinator)	Operational Procedures	Control or Other Responsible Engineer		

NOTES:

SIGNED: _____ NAME: _____ COMPANY: _____ DATE: _____

SIGNED: _____ NAME: _____ COMPANY: _____ DATE: _____

SIGNED: _____ NAME: _____ COMPANY: _____ DATE: _____

SIGNED: _____ NAME: _____ COMPANY: _____ DATE: _____

PAGE: _____ ISSUE NO: _____ DATE: _____

<Connection Code - End of Appendix 1>

Connection Code Appendix 2, Part 1A – Typical Symbols Relating to Operation Diagrams

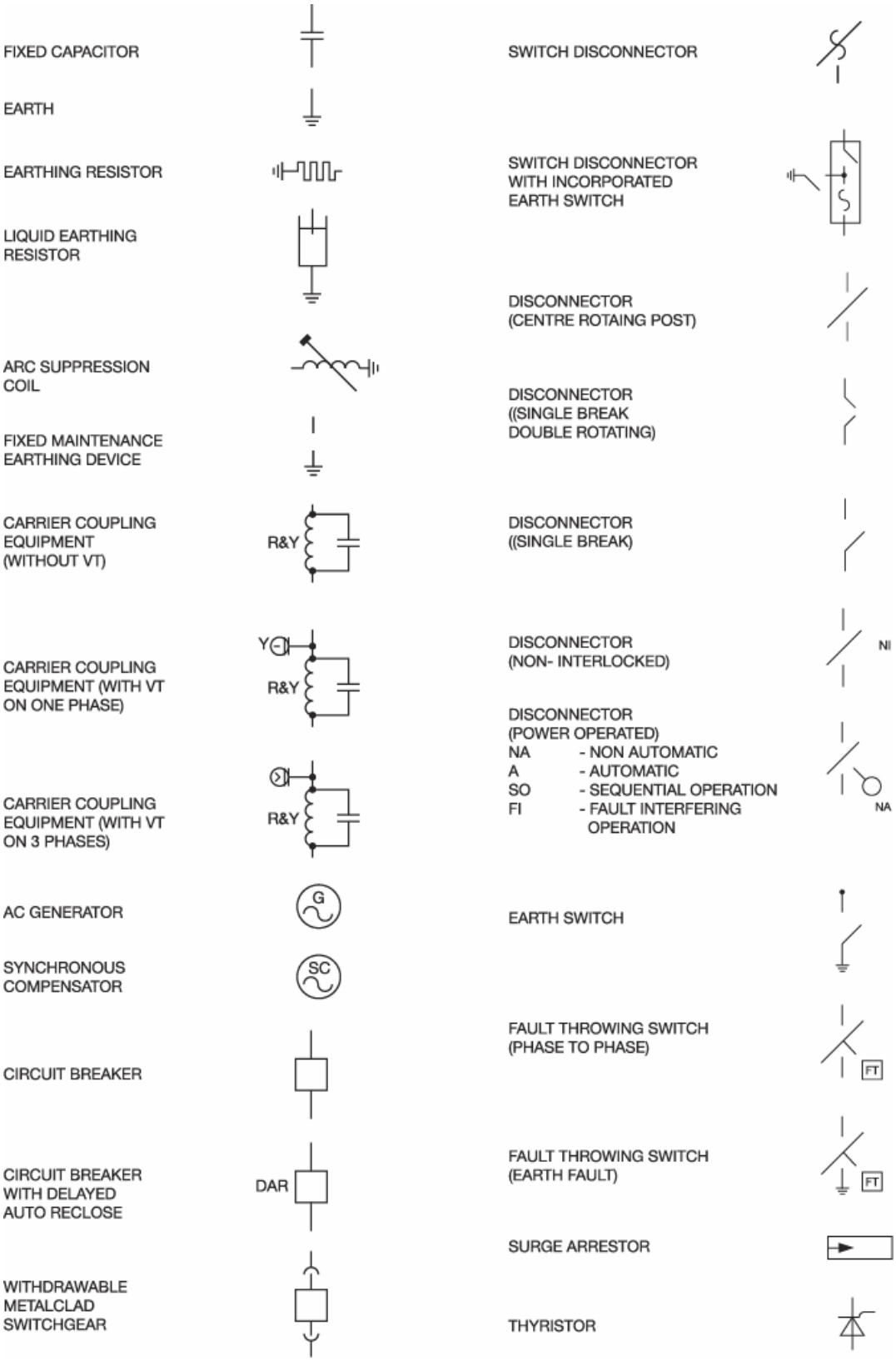

TRANSFORMERS (VECTORS TO INDICATE WINDING CONFIGURATION)

TWO WINDING

THREE WINDING

AUTO

AUTO WITH DELTA TERTIARY

EARTHING OR AUX, TRANSFORMER

(-) INDICATE REMOTE SITE IF APPLICABLE

415v
(-)

VOLTAGE TRANSFORMERS

SINGLE PHASE WOUND

Y

THREE PHASE WOUND

SINGLE PHASE CAPACITOR

Y

TWO SINGLE PHASE CAPACITOR

R&B 2

THREE PHASE CAPACITOR

- CURRENT TRANSFORMER (WHERE SEPARATE PRIMARY APPARATUS)
- COMBINED VT / CT UNIT FOR METERING
- REACTOR

- BUSBARS
- OTHER PRIMARY CONNECTIONS
- CABLE & CANBLE SEALING END
- THROUGH WALL BUSHING
- BYPASS FACILITY
- CROSSING OF CONDUCTORS (LOWER CONDUCTOR TO BE BROKEN)

PREFERENTIAL ABBREVIATIONS

AUXILARY TRANSFORMER	Aux T
EARTHING TRANSFORMER	ET
GAS TURBINE	Gas T
GENERATOR TRANSFORMER	Gen T
GRID TRANSFORMER	Gr T
SERIES REACTOR	Ser Reac
SHUNT REACTOR	Sh Reac
STATION TRANSFORMER	Stn T
SUPERGRID TRANSFORMERSGT	
UNIT TRANSFORMER	UT

- NON STANDARD SYMBOL

Connection Code Appendix 2, PART 1B – Typical Symbols Relating to Gas Zone Diagrams

PORTABLE MAINTENANCE EARTH DEVICE

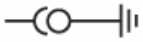

DISCONNECTOR (PANTOGRAPH TYPE)

QUADRATURE BOOSTER

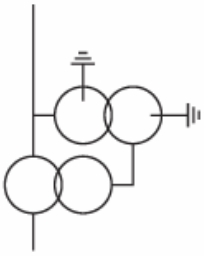

DISCONNECTOR (KNEE TYPE)

SHORTING DISCHARGE SWITCH

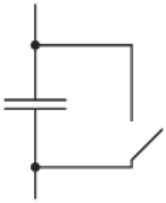

CAPACITOR)INCLUDING HARMONIC FILTER)

SINGLE PHASE TRANSFORMER (BR) NEUTRAL AND PHASE CONNECTIONS

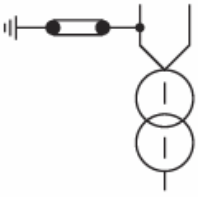

RESISTOR WITH INHERENT NON-LINEAR VARIABILITY, VOLTAGE DEPENDANT

GAS INSULATED BUSBAR

GAS BOUNDARY

GAS / GAS BOUNDARY

GAS / CABLE BOUNDARY

GAS / AIR BOUNDARY

GAS / TRANSFORMER BOUNDARY

MAINTENACE VALVE

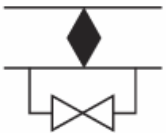

DOUBLE - BREAK DISCONNECTOR

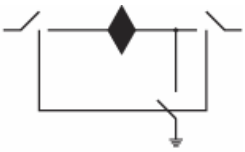

EXTERNAL MOUNTED CURRENT TRANSFORMER (WHERE SEPARATE PRIMARY APPARATUS)

STOP VALVE NORMALLY CLOSED

STOP VALVE NORMALLY OPEN

GAS MONITOR

FILTER

QUICK ACTING COUPLING

Connection Code Appendix 2 Part 2 - Basic Principles and Non-Exhaustive List of Apparatus to be Included in Operation Diagrams

CCA.2.1 Basic Principles

CCA.2.1.1 Where practicable, all the HV Apparatus on any Connection Site shall be shown on one Operation Diagram. Provided the clarity of the diagram is not impaired, the layout shall represent as closely as possible the geographical arrangement on the Connection Site.

CCA.2.1.2 Where more than one Operation Diagram is unavoidable, duplication of identical information on more than one Operation Diagram shall be avoided.

CCA.2.1.3 The Operation Diagram shall show accurately the current status of the Apparatus e.g., whether commissioned or decommissioned. Where decommissioned, the associated switch bay will be labeled "spare bay".

CCA.2.1.4 Provision shall be made on the Operation Diagram for signifying approvals, together with provision for details of revisions and dates.

CCA.2.1.5 Operation Diagrams shall be prepared in A4 format or such other format as may be agreed with the Grid Owner in consultation with the GSO.

CCA.2.1.6 The Operation Diagram shall normally be drawn as a single line diagram. However, where appropriate, detail which applies to individual phases shall be shown. For example, some HV Apparatus is numbered individually per phase.

CCA.2.2 Non-Exhaustive list of apparatus to be shown on Operation Diagram

1. Busbars
2. Circuit Breakers
3. Disconnector (Isolator) and Switch Disconnecters (Switching Isolators)
4. Disconnectors (Isolators) - Automatic Facilities
5. Bypass Facilities
6. Earthing Switches
7. Maintenance Earths
8. Overhead Line Entries
9. Overhead Line Traps
10. Cable and Cable Sealing Ends
11. Generating Unit
12. Generator Transformers
13. Generating Unit Transformers, Station Transformers, including the lower voltage circuit-breakers.
14. Synchronous Compensators
15. Static Variable Compensators
16. Capacitors (including Harmonic Filters)
17. Series or Shunt Reactors (Referred to as "Inductors" at nuclear power station sites)
18. Supergrid and Grid Transformers
19. Tertiary Windings
20. Earthing and Auxiliary Transformers
21. Three Phase VT's
22. Single Phase VT & Phase Identity
23. High Accuracy VT and Phase Identity
24. Surge Arrestors/Diverters
25. Neutral Earthing Arrangements on HV Plant\
26. Fault Throwing Devices
27. Quadrature Boosters
28. Arc Suppression Coils
29. Single Phase Transformers (BR) Neutral and Phase Connections
30. Current Transformers (where separate plant items)
31. Wall Bushings
32. Combined VT/CT Units
33. Shorting and Discharge Switches
34. Thyristor
35. Resistor with Inherent Non-Linear Variability, Voltage Dependent

36. Gas Zone

< Connection Code - End of Appendix 2>

Connection Code Appendix 3 – Minimum Frequency Response Requirement Profile and Operating Range

CCA.3.1 Scope

CCA.3.1.1 The frequency response capability is defined in terms of Primary Response, Secondary Response and High Frequency Response. This Appendix defines the minimum frequency response requirement profile which shall apply for each Generating Unit and/or CCGT Module which has a Completion Date by the Effective Date of this Grid Code.

CCA.3.1.2 For the avoidance of doubt, this appendix does not apply to Generating Units and/or CCGT Modules which have a Completion Date before the Effective Date of this Grid Code or to Minor Generating Plant. For Generating Units and/or CCGT Modules which have a Completion Date before the Effective Date of this Grid Code the provisions of the relevant Agreement or the PPA with the Generator and the measured response of the Units obtained from tests already approved shall apply.

CCA.3.1.3 The functional definition of the frequency response capability provides appropriate performance criteria relating to the provision of frequency control by means of frequency sensitive generation in addition to the other requirements identified in CC6.4.4.2.

CCA.3.1.4 The minimum frequency response requirement profile is shown diagrammatically in Figure CCA.3.1. This capability profile specifies the minimum required levels of Primary Response, Secondary Response and High Frequency Response throughout the normal plant operating range. The definitions of these frequency response capabilities are illustrated diagrammatically in Figures CCA.3.2 and CCA.3.3.

CCA.3.2 Plant Operating Range

CCA.3.2.1 The upper limit of the operating range is the Registered Capacity of the Generating Unit or CCGT Module.

CCA.3.2.2 The Minimum Generation level may be less than, but must not be more than, 65% of the Registered Capacity. Each Generating Unit and/or CCGT Module must be capable of operating satisfactorily down to the Designed Minimum Operating Level as dictated by System operating conditions, although it will not be Dispatched to below its Minimum Generation level. If a Generating Unit or CCGT Module is operating below Minimum Generation because of high System Frequency, it should recover adequately to its Minimum Generation level as the System Frequency returns to Target Frequency so that it can provide Primary and Secondary Response from Minimum Generation if the System Frequency continues to fall. For the avoidance of doubt, under normal operating conditions steady state operation below Minimum Generation is not expected. The Designed Minimum Operating Level must not be more than 55% of Registered Capacity.

CCA.3.2.3 In the event of a Generating Unit or CCGT Module load rejecting down to no less than its Designed Minimum Operating Level it should not trip as a result of automatic action as detailed in SDC3.6. If the load rejection is to a level less than the Designed Minimum Operating Level then it is accepted that the condition might be so severe as to cause it to be disconnected from the System.

CCA.3.3 Minimum Frequency Response Requirement Profile

CCA.3.3.1 Figure CCA.3.1 shows the minimum frequency response requirement profile diagrammatically for a 0.5 Hz change in Frequency. The percentage response capabilities and loading levels are defined on the basis of the Registered Capacity of the Generating Unit or CCGT Module. Each Generating Unit and/or CCGT Module must be capable of operating in a manner to provide frequency response at least to the solid boundaries shown in the figure. If the frequency response capability falls within the solid boundaries, the Generating Unit or CCGT Module is providing response below the minimum requirement which is not acceptable. Nothing in this appendix is intended to prevent a

Generating Unit or CCGT Module from being designed to deliver a frequency response in excess of the identified minimum requirement.

CCA.3.3.2 The frequency response delivered for Frequency deviations of less than 0.5 Hz should be no less than a figure which is directly proportional to the minimum frequency response requirement for a Frequency deviation of 0.5 Hz. For example, if the Frequency deviation is 0.2 Hz, the corresponding minimum frequency response requirement is 40% of the level shown in Figure CCA.3.1. The frequency response delivered for Frequency deviations of more than 0.5 Hz should be no less than the response delivered for a Frequency deviation of 0.5 Hz.

CCA.3.3.3 Each Generating Unit and/or CCGT Module must be capable of providing some response, in keeping with its specific operational characteristics, when operating in between 95% to 100% of Registered Capacity, as illustrated by the dotted lines in Figure CCA.3.1.

CCA.3.3.4 At the Minimum Generation level, each Generating Unit and/or CCGT Module is required to provide high and low frequency response depending on the System Frequency conditions. Where the Frequency is high, the Active Power output is therefore expected to fall below the Minimum Generation level.

CCA.3.3.5 The Designed Minimum Operating Level is the output at which a Generating Unit and/or CCGT Module has no High Frequency Response capability. It may be less than, but must not be more than, 55% of the Registered Capacity. This implies that a Generating Unit or CCGT Module is not obliged to reduce its output to below this level unless the Frequency is at or above 50.5 Hz (cf SDC3.6).

CCA.3.4 Testing of Frequency Response Capability

CCA.3.4.1 The response capabilities shown diagrammatically in Figure CCA.3.1 are measured by taking the responses as obtained from some of the dynamic response tests specified by the Grid Owner in consultation with GSO and carried out by Generators for compliance purposes and to validate the content of relevant Agreement using an injection of a frequency change to the plant control system (i.e., governor and load controller). The injected signal is a linear ramp from zero to 0.5 Hz frequency change over a ten (10) second period, and is sustained at 0.5 Hz frequency change thereafter, as illustrated diagrammatically in figures CCA.3.2 and CCA.3.3.

CCA.3.4.2 The Primary Response capability (P) of a Generating Unit or a CCGT Module is the minimum increase in Active Power output between ten (10) and thirty (30) seconds after the start of the ramp injection as illustrated diagrammatically in Figure CCA.3.2.

CCA.3.4.3 The Secondary Response capability (S) of a Generating Unit or a CCGT Module is the minimum increase in Active Power output between thirty (30) seconds and thirty (30) minutes after the start of the ramp injection as illustrated diagrammatically in Figure CCA.3.2.

CCA.3.4.4 The High Frequency Response capability (H) of a Generating Unit or a CCGT Module is the decrease in Active Power output provided ten (10) seconds after the start of the ramp injection and sustained thereafter as illustrated diagrammatically in Figure CCA.3.3.

CCA.3.5 Repeatability of Response

CCA.3.5.1 When a Generating Unit or CCGT Module has responded to a significant Frequency disturbance, its response capability must be fully restored as soon as technically possible. Full response capability should be restored no later than twenty (20) minutes after the initial change of System Frequency arising from the Frequency disturbance.

Figure CCA.3.1 - Sample Minimum Frequency Response Requirement Profile for a 0.5 Hz Change from Target Frequency

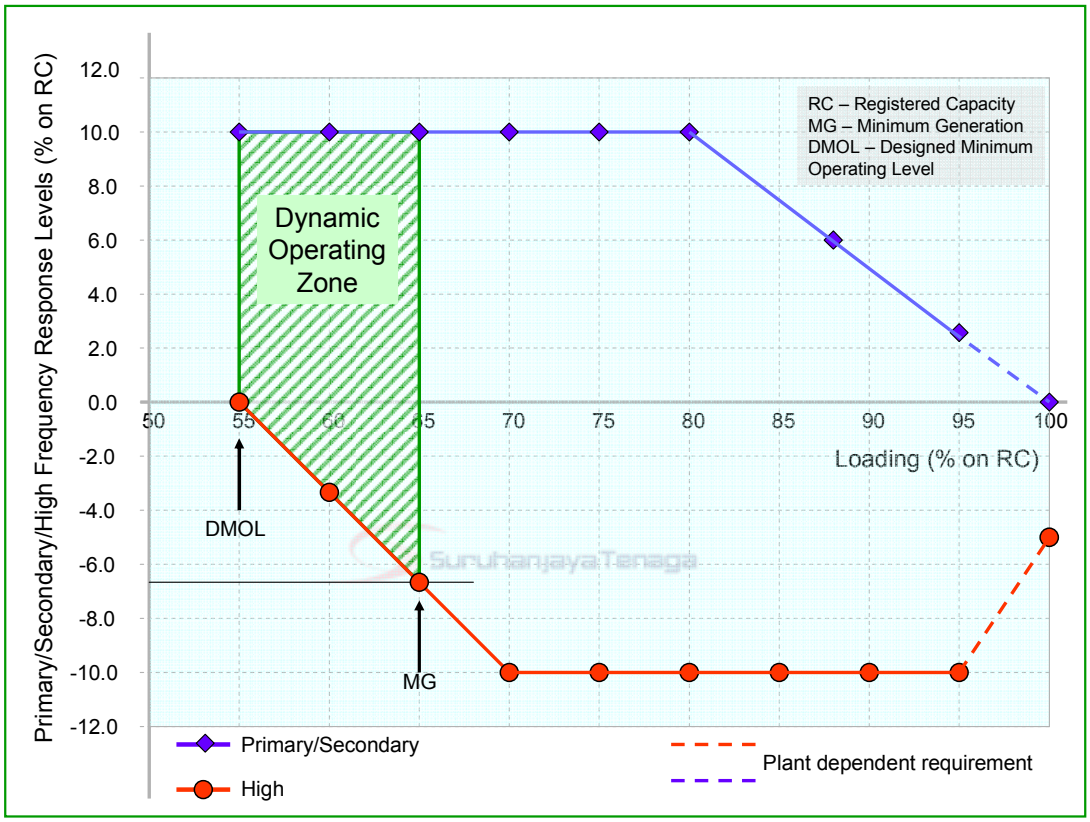

Figure CCA.3.2 - Interpretation of Primary and Secondary Response Values

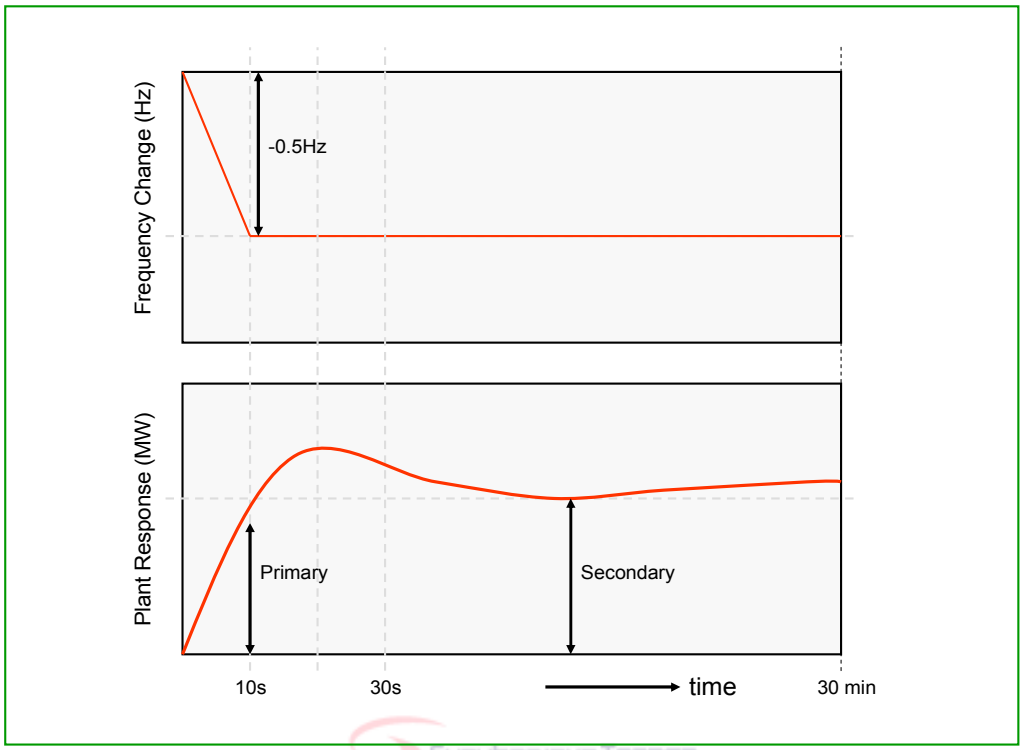

Figure CCA.3.3 - Interpretation of High Frequency Response Values

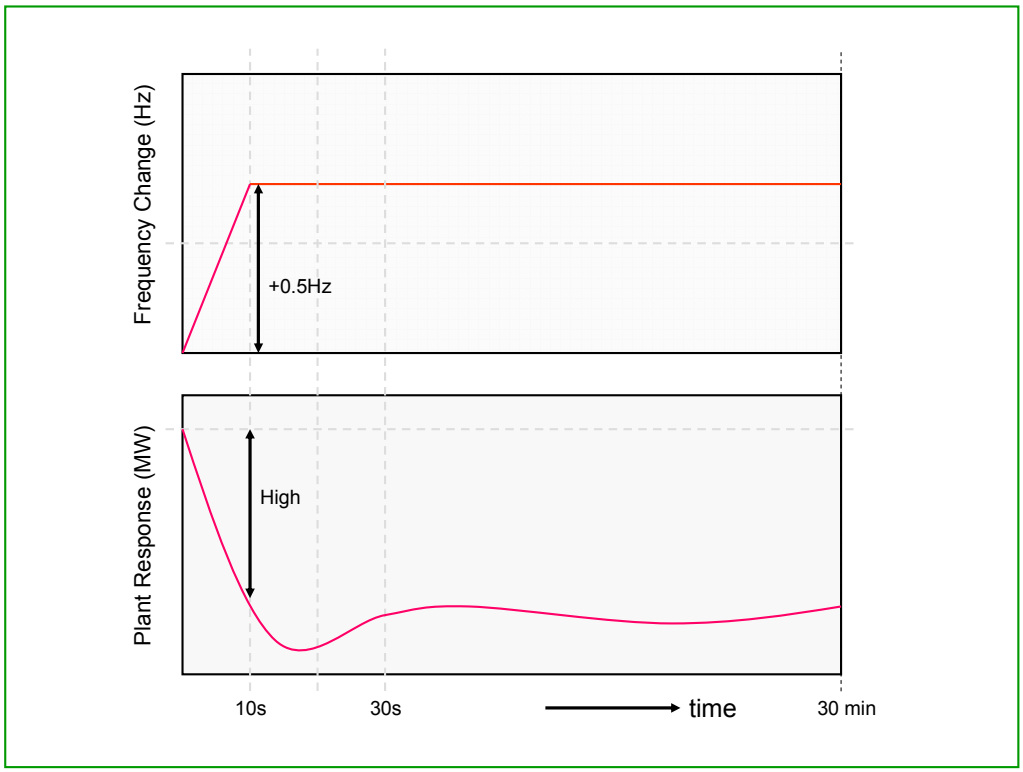

< Connection Code - End of Appendix 3>

Connection Code Appendix 4 – Typical Technical Requirements of Low Frequency Relays for the Automatic Disconnection of Supply at Low Frequency

CCA.4.1 Low Frequency Relays

CCA.4.1.1 The Low Frequency Relays to be used shall be in accordance with the requirements of the relevant Agreement. They should have a setting range of 47.0 to 50Hz and be suitable for operation from a nominal AC input of 63.5, 110 or 240V. The following general parameters on the requirements of approved Low Frequency Relays for automatic installations is given as an indication, without prejudice to the provisions that may be included in a relevant Agreement:

(a)	Frequency settings:	47-50Hz in steps of 0.01Hz
(b)	Measurement period selectable settings:	Within a minimum settings range of 4 to 6
(c)	Operating time:	Between 100 and 150ms dependent on measurement period setting;
(d)	Voltage lock-out (under voltage blocking)	Selectable within a range of 50% to 90% of nominal voltage;
(e)	Facility stages:	Minimum of two stages of Frequency operation;
(f)	Output contacts:	Two output contacts per stage to be capable of repetitively making and breaking for 10000 operations.

CCA.4.2 Low Frequency Relay Voltage Profiles

CCA.4.2.1 It is essential that the voltage supply to the Low Frequency Relays shall be derived from the primary System at the supply point concerned so that the Frequency of the Low Frequency Relays input voltage is the same as that of the primary System. This requires either:

(a) The use of a secure supply obtained from voltage transformers directly associated with the grid transformer(s) concerned, the supply being obtained where necessary via a suitable automatic voltage selection scheme; or

(b) the use of the substation 240V phase-to-neutral selected auxiliary supply, provided that this supply is always derived at the supply point concerned and is never derived from a standby supply Generating Unit or from another part of the User System.

CCA.4.2 Scheme Requirements

CCA.4.3.1 The tripping facility should be engineered in accordance with the following reliability considerations:

(a) Dependability - Failure to trip at any one particular Demand shedding point would not harm the overall operation of the scheme. However, many failures would have the effect of reducing the amount of Demand under low Frequency control. An overall reasonable minimum requirement for the dependability of the Demand shedding scheme is 96%, i.e. the average probability of failure of each Demand shedding point should be less than 4%. Thus the Demand under low Frequency control will not be reduced by more than 4% due to relay failure.

(b) Outages - Low Frequency Demand shedding schemes will be engineered such that the amount of Demand under control is as specified by the GSO and is not reduced unacceptably during equipment outage or maintenance conditions.

<End of the Connection Code>

Part VI: Operating Codes

OC1.0 The Operating Codes comprise:

(1) Operating Code No. 1 (OC1): Demand Forecast
(2) Operating Code No. 2 (OC2): Outage and Other Related Planning
(3) Operating Code No. 3 (OC3): Operating Reserves and Response
(4) Operating Code No. 4 (OC4): Demand Control
(5) Operating Code No. 5 (OC5): Operational Liaison
(6) Operating Code No. 6 (OC6): Significant Incident Reporting
(7) Operating Code No. 7 (OC7): Emergency Operations
(8) Operating Code No. 8 (OC8): Safety Coordination
(9) Operating Code No. 9 (OC9): Numbering and Nomenclature
(10) Operating Code No. 10 (OC10): Testing and Monitoring
(11) Operating Code No. 11 (OC2): System Tests

Operating Code No.1 (OC1): Demand Forecast

OC1.1 Introduction

OC1.1.0 Operating Code No.1 (OC1) is concerned with Demand forecasting for operational purposes. In order to match generation output with Demand for electricity it is necessary to undertake Demand forecasting of Active Energy, Active Power and Reactive Power for operational purposes.

OC1.1.1 This OC1 outlines the obligations on the GSO and Users regarding the preparation of Demand forecasts of Active Energy, Active Power and Reactive Power on the Transmission System. This OC1 sets out the time scales within the Operational Planning and Operational Control periods in which Users shall provide forecasts of Energy and Demand to the GSO so that the relevant operational plans can be prepared.

OC1.1.2 In this OC1, Year 0 means the current year at any time, Year 1 means the next year at any time, Year 2 means the year after Year 1. For operational purposes, each year will be considered to start on the 1st of September.

OC1.1.3 The following distinct phases are used to define the Demand forecasting periods:

(1) Operational Planning Phase covers several time frames of operation from 5-year ahead to the start of the Control Operational Phase as follows:
   - (i) 5-Year ahead forecast – hourly (based on the long-term demand forecast prepared by the Grid Owner while formulating the System Development Plan)
   - (ii) 1-Month ahead forecast – hourly
   - (iii) 10-Day ahead forecast – half hourly
   - (iv) 1-Day ahead forecast – half hourly

(2) Operational Control Phase covers the real time operation period, that is:
   - (i) Hour ahead forecast – half hourly

(3) Post Operational Control Phase is the phase following real time operation.

OC1.1.4 In the Operational Planning Phase, Demand forecasting shall be conducted by the GSO taking account of Demand forecasts furnished by Users who shall provide the GSO with Demand forecasts and other information as outlined in OC1.4.

OC1.1.5 In the Operational Control Phase, the GSO shall refine the Demand Forecasts taking into account any revised information provided by Users and the other factors referred to in OC1.6. In this phase, the GSO shall also collate Demand data on the Transmission System with post real time information for use in future forecasts.

OC1.2 Objectives

OC1.2.1 The objectives of this Code are to:

(1) enable matching of Generation and Demand in operation;
(2) ensure the provision of data to the GSO by Users for operation purposes; and
(3) provide for the factors to be taken into account by the GSO when Demand forecasting is conducted in operation.

OC1.3 Scope

OC1.3.1 This Code applies to the GSO and the following Users:

(1) All Generators with CDGUs;
(2) All Generators with Generating Units not subject to Dispatch by the GSO, with total on-site generation capacity equal to or above 30MW and where the GSO considers it necessary;
(3) Directly Connected Customers where the GSO considers it necessary;
(4) Network Operators;
(5) Distributors;
(6) Directly Connected Customers who have agreed to participate in Demand control; and
(7) Interconnected Parties.

OC1.4 Data Required by the GSO in Operational Planning Phase

OC1.4.0 General

OC1.4.0.1 Users shall provide the necessary information required in OC1.4.1 through OC1.4.5 to the GSO at the time and in the manner agreed between the relevant parties to enable the GSO to carry out the necessary Demand Forecast for the Operational Planning Phase. Users shall notify the GSO immediately of any significant changes to the data submitted in accordance with OC1.4.1 through OC1.4.5.

OC1.4.0.2 In preparing the Demand Forecast, the GSO shall take into account the information provided for under OC1.4, the factors detailed in OC1.6 and also any relevant forecasted or actual Demand growth data provided under the Planning Code for new or modification to existing connections.

OC1.4.1 Generators

OC1.4.1.1 All Generators as defined in OC1.3 (1) and (2) shall submit to the GSO annually by the end of September, electronic files, in the format specified by the GSO, detailing the following:

(1) Generators with CDGUs; any planned changes that will alter the incremental Demand by equal to or greater than ±1 MW during Year 1 at the respective Metering Point. Such Demand could be associated with auxiliary and start-up loads supplied directly from the Transmission System.

(2) Generators with Generating Units not subject to Dispatch by the GSO, with total on-site generation capacity equal to or above 30MW; generation output information relating to its plant such as MW and MWh, within the Operational Planning Phase.

OC1.4.2 Directly Connected Customers

OC1.4.2.1 Directly Connected Customers shall submit to the GSO annually by the end of September, electronic files, in the specified format, detailing the following at the Metering Point:

(1) The half hour Active Power and Reactive Power forecast Demand profiles for the day of that User's maximum Demand.
(2) The half hour Active and Reactive Power forecast Demand for the annual Peninsular Malaysia Maximum Demand.
(3) The half hour Active and Reactive Power forecast Demand for the annual Peninsular Malaysia Minimum Demand.
(4) The annual Active Energy requirements for average conditions.

OC1.4.3 Distributors and Network Operators

OC1.4.3.1 Distributors and Network Operators shall submit to the GSO by the end of September, electronic files, in the specified formatdetailing the following at the Metering Point of each Demand Supply Point:

(1) The half hour Active Power and Reactive Power forecast Demand profiles for the day of that User's maximum Demand.
(2) The half hour Active and Reactive Power forecast Demand for the annual Peninsular Malaysia Maximum Demand.
(3) The half hour Active and Reactive Power forecast Demand for the annual Peninsular Malaysia Minimum Demand.
(4) The annual Active Energy requirements for average conditions.

OC1.4.4 Users Participating in Demand Control

OC1.4.4.1 Users participating in Demand Control shall submit to the GSO, by the end of September, the proposed changes to the previously agreed Demand Control of each Year detailing the following:

(1) Values of Active Power Demand that the User can be instructed by the GSO to disconnect, in increments of 1 MW, with indicative times for notification of the requirements to disconnect.
(2) Firm values of Active Power Demand that the User can be instructed by the GSO to disconnect, in increments of 1 MW, with firm times for notification of the requirements to disconnect.

OC1.4.5 Externally Interconnected Parties

OC1.4.5.1 It is the responsibility of the GSO to request in the manner and format that have been specified in the relevant Agreement with each Interconnected Party of the hourly Active Power Demand to be imported from or exported to the Interconnected Party over the total time period agreed in the relevant Agreement.

OC1.5 Data Required by the GSO in the Post Operational Control Phase

OC1.5.1 The GSO may also require information in the Post Operational Control Phase for future forecasting purposes. Such information shall be provided at the time and in the manner agreed between the relevant parties.

OC1.5.2 The net station output in Active Power and Reactive Power of each Power Station with a capacity of 30MW and above will be monitored by the GSO at its control centre in real time. The output in Active Power and Reactive Power of Power Stations with a capacity of below 30MW may be monitored by the GSO at its control centre if the GSO, acting reasonably, so decides.

OC1.5.3 The GSO may request the Generators with non-CDGUs to provide half-hourly Active Power and Total Daily Energy data in respect of each generating site that does not have direct monitoring facilities for use by the GSO. Such information shall be provided to the GSO in the manner and format approved by the GSO, by 0300 hours on the following day.

OC1.6 GSO Data to be Used in Producing Demand Forecast

OC1.6.0 General

OC1.6.0.1 The GSO will take into account the factors described in OC1.6.1 to OC1.6.5 when conducting Demand forecasting and any other information that may be material or supplied by Users as described in OC1.4.1 to 1.4.5.

OC1.6.1 Historical Demand Data

OC1.6.1.1 The use of Historical Power Station output information pursuant to OC1.5, which will enable historical Transmission System losses to be calculated and, hence, Transmission System losses to be included in the forecast.

OC1.6.1.2 Historical Transmission System Demand profiles compiled by the GSO through SCADA, metered data, Energy sales data from the Distributors and information obtained pursuant to the Post Operational Control Phase in OC1.5.

OC1.6.2 Weather Information

OC1.6.2.1 The GSO in implementing the demand forecast for operation shall take into account the effect of weather and its correlation with demand. Weather parameters obtainable on regional basis and by major cities that must be considered by the GSO include; temperature, rain and its duration, cloud cover, seasonal effects, e.g., Northeast Monsoon and hot spells in between monsoon seasons.

OC1.6.3 Incidents and Major Events Known in Advance

OC1.6.3.1 The GSO in implementing the demand forecast for operation shall take into account incidence of major events known to the GSO in advance which may affect the Demand on the Grid System, for example, extended public holidays.

OC1.6.4 Committed Flows From External Parties

OC1.6.4.1 The GSO in implementing the demand forecast for operation shall take into account import or export commitments with Interconnected Parties.

OC1.6.5 Demand Control Offered by Users

OC1.6.5.1 Pursuant to optimising the matching of Generation, Demand, and Reserve Margin, the GSO will consider, following the production of each Generation Schedule, whether there is sufficient Generation to match Demand and take into consideration any offered Demand Control where this is required to achieve such a match.

<End of the Operating Code No 1: Demand Forecast>

Operating Code No.2 (OC2): Outage and Other Related Planning

OC2.1 Introduction

OC2.1.1 Operating Code No. 2 (OC2) is concerned with the coordination between the GSO and Users through the various time scales of planned outages of Plant and Apparatus on User's Systems which may affect the operation of the Grid System and/or require the commitment of (alternative) resources by the GSO.

OC2.1.2 In this OC2, Year 0 means the current year at any time, Year 1 means the next year at any time, Year 2 means the year after Year 1, Year 3 means the year after Year 2, Year 4 means the year after Year 3, Year 5 means the year after Year 4. For operational purposes, each year will be considered to start on the 1st of September.

OC2.1.3 The time scales involved in OC2 are from Year 5 down to the One–day ahead which cover Operational Planning down to the start of the Operational Control Phase.

OC2.2 Objectives

OC2.2.1 The objectives of OC2 are to:

(1) Enable the GSO to coordinate generation and transmission outages to achieve economic operation and minimise constraints;

(2) to set out procedure including information required and a typical timetable for the coordination of planned outage requirements for Generators;

(3) to set out procedure including information required and a typical timetable for the coordination of planned outage requirements for other Users that will have an effect on the operation of the Grid System; and

(4) to establish the responsibility of the GSO to produce an Operational Plan on the Grid System.

OC2.3 Scope

OC2.3.1 This Code applies to the GSO and the following Users:

(1) All Generators with CDGUs;
(2) All Generators with Generating Units not subject to Dispatch by the GSO, with total on-site generation capacity equal to or above 30MW where the GSO considers it necessary;
(3) TNB Transmission;
(4) Distributors;
(5) Directly Connected Customers where the GSO considers it necessary;
(6) Network Operators; and
(7) Interconnected Parties.

OC2.4 Submission of Planned Outage Schedules by Users

OC2.4.1 Generators

OC2.4.1.1 In each Year, by the end of September of Year 0, each Generator with CDGUs shall provide the GSO with an "Indicative Generator Maintenance Schedule" which covers Year 1 up to Year 5. The schedule will contain the following information:

(1) Identity of the CDGU;
(2) MW not available;
(3) Other Apparatus affected by the same outage;
(4) Duration of outage;
(5) Preferred start and end date;
(6) State whether the planned outage is flexible, if so, provide the earliest start date and latest finishing date;
(7) State whether the planned outage is due to statutory obligation (for example for pressure vessel inspection/boiler check), if so, the latest date the outage must be taken; and
(8) To state detail of any test which may affect the performance of the Grid System or the GSO's operational plan or risk of tripping.

OC2.4.1.2 In each Year by the end of September of Year 0, each Generator with CDGUs shall also provide the GSO with a "Provisional Generator Maintenance Schedule" which covers Year 1 on a daily basis which for the avoidance of doubt means providing information for each day of Year 1 beginning 1st of September and ending 31st of August. This schedule shall be submitted, in a format agreed by the GSO, and take account of the Operational Plan described in OC2.5, comprising of:

(1) type of outages for each CDGU;
(2) the period of each outage consistent with the Operational Plan; and
(3) any other outages as required by statutory organisations or for statutory reasons.

OC2.4.2 Grid Owner

OC2.4.2.1 In each Year, by the end of September of Year 0, Grid Owner shall provide the GSO with an "Indicative Transmission Outage Schedule" which covers Year 1 up to Year 5. The schedule will contain the following information:

(1) details of proposed outages of transmission equipment on Transmission System;
(2) details of any trip testing and risk of any transmission equipment trip associated with each trip test;
(3) details of identifiable risk of transmission equipment trip arising from the work carried during the outage; and
(4) other information known to Grid Owner which may affect the reliability and security of the Grid System.

OC2.4.2.2 In each calendar year by the end of September of Year 0, Grid Owner shall provide the GSO with a "Provisional Transmission Outage Schedule" which covers Year 1 on a daily basis which for the avoidance of doubt means providing information for each day of Year 1 beginning 1st of September and ending 31st of August. This schedule shall be submitted, in a format agreed by the GSO, and takes account of the Operational Plan described in OC2.5, comprising of:

(1) type of transmission outages;
(2) the period of each outage consistent with the Operational Plan; and
(3) any other outages as required by statutory organisations or for statutory reasons.

OC2.4.3 Network Operators and Distributors

OC2.4.3.1 In each calendar year, by the end of September of Year 0, each Network Operator or Distributor shall provide the GSO with an "Indicative Network Outage Schedule" which covers Year 1 up to Year 5. The schedule will contain the following information:

(1) details of proposed outages on their Systems which may affect the performance of the Grid System or requiring switching operation in the Grid System;

(2) details of any trip testing and risk of it causing trip of any transmission equipment in the Grid System;

(3) other information known to the Network Operator or the Distributor which may affect the reliability and security of the Grid System.

OC2.4.3.2 Network Operators or Distributors shall submit details of any changes made to the information provided above to the GSO as soon as practicable.

OC2.4.4 Directly Connected Customers

OC2.4.4.1 Each Directly Connected Customer upon the request of the GSO shall provide the GSO within a reasonable time period agreed with the GSO an "Indicative Network Outage Schedule" which covers Year 1 up to Year 5 that will contain the following information:

(1) details of proposed outages on their Systems which may affect the performance of the Grid System or requiring switching operation in the Grid System;

(2) details of any trip testing and risk of it causing trip of any transmission equipment in the Grid System;

(3) other information known to the Directly Connected Customer which may or may affects the reliability and security of the Grid System.

OC2.4.4.2 Following submission of the above information, the Directly Connected Customers shall inform the GSO the details of any changes made to the information as soon as practicable.

OC2.4.5 Interconnected Parties

OC2.4.5.1 Because Interconnected Parties have knowledge of both generation and transmission outages on the Power Systems they are involved with, it is the responsibility of the Single Buyer and GSO to ensure that agreements are put in place and reviewed regularly with each Interconnected Party for exchange of information on operation in the Interconnected Party's System that may effect the Grid System.

OC2.5 Planning of Generating Units Outages

OC2.5.1 Operational Planning Timescales from 2 Years Ahead to 1 Year Ahead

OC2.5.1.1 During the preparation of the Operational Plan, the GSO will endeavour to accommodate all outage requirements. However, there may be occasions when an outage cannot be met, and this will require additional consultation between the GSO and Users to formulate a best fit Operational Plan.

OC2.5.1.2 The GSO will issue to Users the First Draft Operational Plan by the end of November of current year (Year 0). Users have, until the end of December of current year (Year 0), to notify the GSO of any objections to this first draft of the Operational Plan. The GSO will then consult Users to resolve any differences over the first draft Operational Plan and produce a final Operational Plan by the end of May of Year 0.

OC2.5.1.3 Once the Operational Plan is issued by the GSO, the maintenance outage can only be changed:

(a) by order of the GSO for reasons of security of the Grid System provided that safety of any equipment is not compromised and that the order is not in violation of any statutory requirements;.

(b) by approval of the GSO prior to the commencement of the outage, for reasons of security of supply, or security of the Grid System, or safety of User's staff, or safety of User's equipment or safety of members of the public;

(c) by agreement between the GSO and a Generator where only that Generator is affected by the proposed changes;

(d) by agreement between the GSO and a Directly Connected Customer where only that Directly Connected Customer is affected by the proposed changes; or

(e) by agreement between the GSO and a Network Operator or the Distributor where only the Network Operator or the Distributor is affected by the proposed changes.

OC2.5.1.4 When a User cannot reach agreement with the GSO concerning the Operational Plan, then the dispute will be settled in accordance with the Grid Code Dispute Resolution Procedure, contained in the General Conditions (GC).

OC2.5.1.5 The Operational Plan will be reviewed by the GSO each month prior to the implementation date to check the latest forecasts of Power System Demand, and generation output usable to assess whether adequate Operating Reserves will be available. Where the GSO assesses that these requirements may be infringed, further iteration of the Planned Outages will be undertaken, to meet, as far as possible those requirements.

OC2.5.2 Unplanned Outages

OC2.5.2.1 Unplanned Outage in this context refers to outage not included in the Final Operation Plan established by the GSO by the end of May of each year.

OC2.5.2.2 Where due to unavoidable circumstances a User needs to arrange an Unplanned Outage then the User must give as early as possible notification of the Unplanned Outage and submit it to the GSO for approval. This will normally be provided in writing but where this is not possible, it may be provided by telephone or other electronic means provided that it is acknowledged by the GSO and a written record of the request is kept by the GSO and the User. Notification must provide:

(1) full details of all Plant and Apparatus affected by temporary capacity restrictions;
(2) the expected start date and start time of the Unplanned Outage;
(3) the estimated return to service time and date of the Plant and Apparatus affected, and the time and date of the removal of any temporary capacity restrictions; and
(4) details of possible restrictions, or risk of trip, on other Plant and Apparatus due to the Unplanned Outage.

OC2.5.2.3 The GSO may request the User to make changes related to an Unplanned Outage programme when in the opinion of the GSO the

Unplanned Outage would adversely affect the security of the Grid System. User will send written confirmation of their agreement or disagreement to the GSO of the new Unplanned Outage date and time.

OC2.5.2.4 For a Forced Outage, the GSO shall take all reasonable measures to maintain the integrity and security of the Grid System.

OC2.6 Planning of Transmission Outages

OC2.6.1 Operational Planning Timescales 5 Years Ahead to 1 Year Ahead

OC2.6.1.1 The GSO shall plan Transmission System outages required in Years 5 to 1 inclusive required as a result of construction or refurbishment or maintenance.

OC2.6.1.2 Users should bear in mind that the GSO will be planning its Transmission System outage programme on the basis of the previous year's Operational Plan and if in the event a User's outages differ from those contained in the Operational Plan and, by so doing, conflict with the Operational Plan, the GSO need not alter its Transmission System outage programme.

OC2.6.1.3 By the end of November of Year 0 the GSO will draw up a draft Transmission System outage plan (in the Draft Operation Plan) covering the period Years 1 to 5 ahead and the GSO will notify each relevant Users in writing of those aspects of the plan which may operationally affect such User including in particular proposed start dates and end dates of relevant Transmission System outages.

OC2.6.1.4 The GSO will also indicate where a need may exist to use Operational Intertripping, emergency switching, emergency Demand management or other measures including restrictions (and reasons for such restrictions) on the dispatch of the Units to allow the security of the Transmission System to be maintained within the Licence Standards.

OC2.6.1.5 The GSO shall have the right to request the Grid Owner to schedule outages to coordinate with other User or Generating Plant outages for the optimisation of the Grid System operation. The Grid Owner shall not unreasonably refuse such requests.

OC2.6.1.6 By the end of May of Year 0 the GSO will draw up a final Transmission System outage plan covering Years 1 to 5. The plan for

Year 1 becomes the final plan for Year 0 when by expiry of time, Year 1 becomes Year 0.

OC2.6.1.7 The GSO will notify each User in writing of those aspects of the plan which may operationally affect such User including in particular proposed start dates and end dates of relevant Transmission System outages.

OC2.6.1.8 The GSO will also indicate where a need may exist to use Operational Intertripping, emergency switching, emergency Demand management or other measures including restrictions (and reasons for such restrictions) on the Dispatch of the units to allow the security of the Total System to be maintained within the Licence Standards.

OC2.6.1.9 In addition, in relation to the final Transmission System outage plan for Year 1, the GSO shall provide to each Generator only those details relating to the Final Transmission System outage plan which may materially affect the Generating Plant of that Generator for that year. It should be noted that the Final Transmission System outage plan for Year 1 and the updates will not give a complete understanding of how the Grid System will operate in real time, where the Grid System operation may be affected by other factors which may not be known at the time of the plan and the updates. Therefore, Users should place no reliance on the plan or the updates showing a set of conditions which will actually arise in real time.

OC2.6.2 Operational Planning Timescales for Year 0

OC2.6.2.1 The Transmission System outage plan for Year 1 issued under OC2.6.1 shall become the plan for Year 0 when by expiry of time, Year 1 becomes Year 0.

OC2.6.2.2 Each User may at any time during Year 0 request the GSO in writing for changes to the outages defined by them under OC2.4 in relation to that part of Year 0, excluding the period 1-7 weeks from the date of request, the GSO shall determine whether the changes are possible and shall notify the User in question whether this is the case as soon as possible, and in any event within fourteen (14) days of the date of receipt by the GSO of the written request in question.

OC2.6.2.3 Where the GSO determines that any change so requested is possible and notifies the relevant User accordingly, the GSO will provide to each relevant User with a copy of the request to which it has agreed which relates to outages on the relevant User Systems. The information must only be used by the User in operating that User's System and must not be used for any other purpose or passed on to, or used by, any other business of that User or to, or by, any person within any other such business or elsewhere.

OC2.6.2.4 The GSO may request the relevant User to provide information on load transfer capability between two or more Grid Supply Points through the User's network.

OC2.6.2.5 When necessary during Year 0, the GSO will notify each User, in writing of those aspects of the Transmission System outage programme in the period from the 8th week ahead to the 52nd week ahead, which may, in the reasonable opinion of the GSO, operationally affect that User including in particular proposed start dates and end dates of relevant Transmission System outages.

OC2.6.2.6 There may be a requirement to undertake an unplanned outage which in this OC2 means a maintenance outage not included in the Final Operation Plan established by the GSO by the end of May of Year 0. Where and Unplanned Outage has a duration of two (2) days or less it is termed a Short Duration Unplanned Outage.

OC2.6.2.7 The required notification of a Short Duration Unplanned Outage by the Grid Owner depends on the duration of the outage and the plant or apparatus or equipment being taken out of service. For plant or apparatus or equipment taken out of service other than as provided for in OC2.6.2.8 the following provisions apply:

(1) For outages of less than one (1) day, the notification period should be not less than fourteen (14) business days before the earliest start date.

(2) For outages whose duration is more than one (1) day but not more than two (2) days, the notification period should be not less than one (1) calendar month before the earliest start date.

OC2.6.2.7 For outages of a substation busbar or all circuits on a right-of-way (which may be two (2) or more circuits on that right-of-way), notification for a Short Duration Unplanned Outage should not be less than four (4) calendar months before the earliest outage date.

OC2.6.2.8 For outages of a substation busbar or all circuits on a right-of-way (which may be two (2) or more circuits on that right-of-way), notification for a Short Duration Unplanned Outage should not be less than four (4) calendar months before the earliest outage date.

OC2.6.2.9 Outages of a longer duration than two (2) days within the provisions of OC2.6.2.7 and OC2.6.2.8 are not normally accepted by the GSO.

OC2.6.2.10 Where due to unavoidable circumstances the Grid Owner needs to arrange an Unplanned Outage (other than Short Duration Unplanned Outage) then the Grid Owner must give as early as possible notification of the Unplanned Outage and submit it to the GSO for approval. This will normally be provided in writing but where this is not possible, it may be provided by telephone or other electronic means provided that it is acknowledged by both the parties i.e. the GSO and the Grid Owner. Notification must provide:

(1) full details of all Plant and Apparatus affected by temporary capacity restrictions;
(2) the expected start date and start time of the Unplanned Outage;
(3) the estimated return to service time and date of the Plant and Apparatus affected, and the time and date of the removal of any temporary capacity restrictions; and
(4) details of possible restrictions, or risk of trip, on other Plant and Apparatus due to the Unplanned Outage.

OC2.6.2.11 The GSO may request the Grid Owner to make changes related to an Unplanned Outage programme when in the opinion of the GSO the Unplanned Outage would adversely affect the security of the Total System. the Grid Owner will send a written confirmation to the GSO agreement or disagreement of the new Unplanned Outage date and time in writing but where this is not possible, it may be provided by telephone or other electronic means provided that a written record of the agreement or disagreement is kept by the GSO and the Grid Owner.

OC2.6.2.12 For a Forced Outage, the GSO shall take all reasonable measures to maintain the integrity and security of the Grid System.

OC2.7 Programming Phase

OC2.7.1 The GSO shall prepare a preliminary outage programme for the eighth (8th) week ahead, a provisional plan for seven (7) week ahead, firm plan for one (1) week ahead and the Day Ahead plan.

OC2.7.2 The GSO will notify each User, in writing of those aspects of the preliminary Transmission System outage programme which may operationally affect that User including in particular proposed start dates and end dates of relevant Transmission System outages and changes to information supplied by the GSO.

OC2.7.3 The GSO will also indicate where a need may exist to use Operational Intertripping, emergency switching, emergency Demand management or other measures including restrictions (and the reasons for such restrictions) on the Dispatch Units to allow the security of the Grid System to be maintained within the Licence Standards.

OC2.7.4 Users shall submit to the GSO, notification on confirmation of outages involving their Systems in not less than two (2) weeks prior to the date of each outage.

OC2.7.5 By 1700 hours each Friday the GSO shall prepare:

(1) Seven (7) week ahead provisional outage programme;
(2) One (1) week ahead firm outage programme; and
(3) A Day Ahead outage programme for the weekend through to the next normal Working Day.

OC2.7.6 By 1700 hours each Monday, Tuesday, Wednesday and Thursday the GSO shall prepare a final Transmission System outage programme for the following day.

OC2.8 Other Planning Requirements

OC2.8.0 General

OC2.8.0.1 The Grid Owner may undertake or the GSO may request the Grid Owner to undertake maintenance or refurbishment of energized transmission Plant or Apparatus which may lead to risk of trip. Within

OC2.7 such maintenance or refurbishment work is referred to Live Apparatus Working.

OC2.8.0.2 Live Apparatus Working may take place as a scheduled or unplanned activity or at the request of the GSO to secure the Grid System.

OC2.8.1 Scheduled Live Apparatus Working

OC2.8.1.1 Where the Grid Owner wishes to undertake Live Apparatus Working within its planned maintenance schedule it will inform the GSO of the requirement at least one (1) month prior to the intended start date. The GSO having due regard to the integrity and security the Grid System and safety will either agree or refuse the request. If the GSO refuses the request it will discuss the intended start and completion date of the proposed works with the view to agreeing revised intended start and completion dates with the Grid Owner.

OC2.8.2 Unplanned Live Apparatus Working

OC2.8.2.1 Where the Grid Owner in unavoidable circumstances finds it necessary to carry out Live Apparatus Working under circumstances other than as described in OC2.8.1 it will inform the GSO of it intention to carry out such Live Apparatus Working giving the intended start time and date and seeking acceptance by the GSO. The GSO having due regard to the integrity and security the Grid System and safety will either accept or refuse the request. Acceptance will not be unreasonably withheld.

OC2.8.2.2 In the event that safety of personnel or Plant or Apparatus or Equipment or the Total System is likely to be prejudiced by the proposed Live Apparatus Working it will not be undertaken.

OC2.8.3 Live Apparatus Working at the Request of the GSO

OC2.8.3.1 Where the GSO following examination of the Transmission Outage Plan determines that a scheduled outage might need to be refused because it might prejudice the security and integrity of the Grid System and following discussion with the Grid Owner alternative outage dates cannot be agreed, the GSO may request the the Grid Owner to undertake Live Apparatus Working having due regard to the alternate

security and integrity of the Grid System imposed by Live Apparatus Working in replacement of the outage.

OC2.8.3.2 The Grid Owner having due regards to all circumstances pertaining, as a result of the change from an outage to Live Apparatus Working, shall accept or reject such request. Acceptance will not be unreasonably withheld.

OC2.9 Operational Planning Data Required

OC2.9.1 On commissioning and by the end of September in the year following the commissioning and by the end of September every third (3rd) year thereafter or when there is change in parameters, each Generator shall submit, in respect of each CDGU, to the GSO and Grid Owner, in writing the Generation Planning Parameters and the Generator Performance Chart. The Generation Planning Parameters shall be in the format indicated in Appendix 1 and the Generator Performance Chart shall be as set out in Appendix 2.

OC2.9.2 Any changes to the Generation Planning Parameters or Generator Performance Chart shall be promptly notified to the GSO and the Grid Owner.

OC2.9.3 The Generator Performance Chart must be on a Generating Unit specific basis at the Generating Unit Stator Terminals and must include details of the Generating Unit transformer parameters and demonstrate the limitation on reactive capability with the System voltage at 3% above nominal. It must include any limitations on output due to the prime mover (both maximum and minimum) and Generating Unit step-up transformer.

OC2.9.4 For each CCGT Unit, and any other Generating Unit whose performance varies significantly with any site related parameter (for example, ambient temperature, type of fuel, etc.) the Generator Performance Chart shall show curves for at least three values of each parameter so that the GSO and the Grid Owner can assess the variation in performance over all likely parameter variations by a process of linear interpolation or extrapolation. One of these curves shall be for the ambient temperature and nominated fuel for which the Generating Unit's output, or CCGT Unit output, as appropriate, equals its Registered Capacity.

OC2.9.5 For each Generating Unit a Performance Chart shall be submitted at ambient temperature and nominated fuel for each of the following conditions:

(1) nominal terminal voltage;
(2) terminal voltage at 10% above nominal terminal voltage; and
(3) terminal voltage at 10% below nominal terminal voltage.

OC2.9.6 The Generation Planning Parameters supplied under this OC2.7 shall be used by the GSO for operational planning purposes only and not in Scheduling and Dispatch.

OC2.9.7 Each Generator shall in respect of each of its CCGT Modules submit to the GSO and the Grid Owner in writing a CCGT Module Planning Matrix. It shall be prepared on a best estimate basis relating to how it is anticipated the CCGT Module will be running and which shall reasonably reflect the true operating characteristics of the CCGT Module. It must show the combination of CCGT Units which would be running in relation to any given MW output, in the format indicated in Appendix 3.

OC2.10 Data Exchange

OC2.10.1 All studies in operational timescale shall be carried out by the GSO. The GSO may at the request of a User carry out studies for that User. Both the GSO and the User shall make the necessary data to carry out the study available for the purposes of such study. Any information used in or arising from the studies must only be used by the User in operating that User's System and must not be used for any other purpose or passed on to, or used by, any other business of that User or to, or by, any person within any other such business or elsewhere.

OC2.11 Notices for Inadequate Generation Capacity to Meet Demand

OC2.11.1 Year Ahead

OC2.11.1.1 In each year, by the end of May the GSO will, taking into account the Generator Maintenance Schedule of each Generator, forecast of Output Usable supplied by each Generator and forecast Demand, issue a notice in writing to:

(a) all Generators with CDGUs listing any period in which there is likely to be inadequate generation Capacity to meet Demand; and

(b) all Generators with CDGUs which may, in the reasonable opinion of the GSO be affected, listing any period in which there is likely to be an unsatisfactory localised inadequacy of generation Capacity, together with the identity of the relevant System Constraint Group or Groups,

within the next Year, together with a statement of the deficit of generation. The GSO and each Generator will take these into account in seeking to co-ordinate outages for that period.

OC2.11.2 Programming During Period of Inadequate Generation Capacity

OC2.11.2.1 By 1000 hours each Business Day each Generator shall provide the GSO in writing with a best estimate of Dispatch Unit inflexibility, or CDGU unavailability due to a maintenance outage, on a daily basis for the period two (2) to fourteen (14) days ahead (inclusive).

OC2.11.2.2 By 1600 hours each Wednesday each Generator shall provide the GSO in writing with a best estimate of Dispatch Unit inflexibility, or CDGU unavailability due to a maintenance outage, on a weekly basis for the period two (2) to seven (7) weeks ahead (inclusive).

OC2.11.2.3 Between 1600 hours each Wednesday and 1200 hours each Friday if the GSO, taking into account the estimates supplied by the Generators and Demand forecast for the period, foresees that:

(1) there is inadequate generation Capacity to meet Demand for any period within the period two (2) to seven (7) weeks ahead (inclusive), it will issue a notice in writing to all Users and the Energy Commission listing any periods and levels of inadequacy within that period; and/or

(2) having also taken into account the appropriate limit on transfers to and from a System Constraint Group, the level of localised inadequacy of generation Capacity for any period within the period two (2) to seven (7) weeks ahead (inclusive) for a particular System Constraint Group, it will issue a notice in writing to all Users which may, in the reasonable opinion of the GSO be affected by that localised inadequacy of generation, listing any periods and levels of localised inadequacy within that period. A separate notice will be given in respect of each affected System Constraint Group.

OC2.11.2.4 The GSO will then contact Generators in respect of their Generating Plant to discuss outages and whether any change is possible to the estimate of Dispatch Unit inflexibility or CDGU unavailability due to a maintenance outage. The GSO will also contact Users who have agreed to participate in Demand Control, as determined under OC1.4.4 to discuss levels of firm Demand Control that can be activated.

OC2.11.2.5 If on the day prior to a Schedule Day, it is apparent from the Availability Declarations submitted by Generators under SDC1 that there will be inadequate generation Capacity to meet Demand and/or Localised inadequate generation Capacity to meet Demand (as the case may be), then in accordance with the procedures and requirements set out in SDC1, the GSO may contact Generators to discuss whether changes to inflexibility or Offered Availability are possible, and if they are, will reflect those in the Generation Schedule. The GSO will also invoke Demand Control to the extent that it is required to match generation and Demand.

<End of the Operating Code No 2: Outage and Other Related Planning>

Operating Code 2 Appendix 1 – Generation Parameters Required for Operational Purposes

OC1A.1 Generation Planning Parameters

The following parameters are required in respect of each Dispatch Unit.

OC1A.1.1 Regime Unavailability - Where applicable the following information must be recorded for each Dispatch Unit.

- Earliest synchronising time:
  Monday
  Tuesday to Friday
  Saturday to Sunday
- Latest de-synchronising time:
  Monday to Thursday
  Friday
  Saturday to Sunday

OC1A.1.2 Synchronising Intervals -

(a) The Synchronising interval between Dispatch Units in a Synchronising Group assuming all Dispatch Units have been Shutdown for forty eight (48) hours;

(b) The Synchronising Group within the Power Station to which each Dispatch Unit should be allocated.

OC1A.1.3 De-Synchronising Interval - A fixed value De-Synchronising interval between Dispatch Units within a Synchronising Group.

OC1A.1.4 Synchronising Generation - The amount of MW produced at the moment of Synchronising assuming the Dispatch Unit has been Shutdown for forty eight (48) hours.

OC1A.1.5 Minimum On-time - The minimum period on-load between Synchronising and De-Synchronising assuming the Dispatch Unit has been Shutdown for forty eight (48) hours.

OC1A.1.6 Run-Up rates - A run-up characteristic consisting of up to three stages from Synchronising Generation to Output Usable with up to two intervening break points assuming the Dispatch Unit has been Shutdown for forty eight (48) hours.

OC1A.1.7 Run-down rates - A run down characteristic consisting of up to three stages from Output Usable to De-Synchronising with breakpoints at up to two intermediate load levels.

OC1A.1.8 Notice to Synchronise - The period of time normally required to Synchronise a Dispatch Unit following instruction from GSO assuming the Dispatch Unit has been Shutdown for forty eight (48) hours.

OC1A.1.9 Minimum Shutdown time - The minimum interval between De-Synchronising and Synchronising a Dispatch Unit.

OC1A.1.10 Two Shifting Limit - The maximum number of times that a Dispatch Unit may De-Synchronise per Schedule Day.

OC1A.1.11 Regulation Parameters –

(a) Spinning Reserve Level.
(b) Loading rate from Spinning Reserve Level to Output Usable.
(c) De-loading rate from Output Usable to the Spinning Reserve Level.

<End of the Operating Code No 2: Outage and Other Related Planning – Appendix 1>

Operating Code 2 Appendix 2 – Generation Parameters – Example Generating Unit Capability Curve

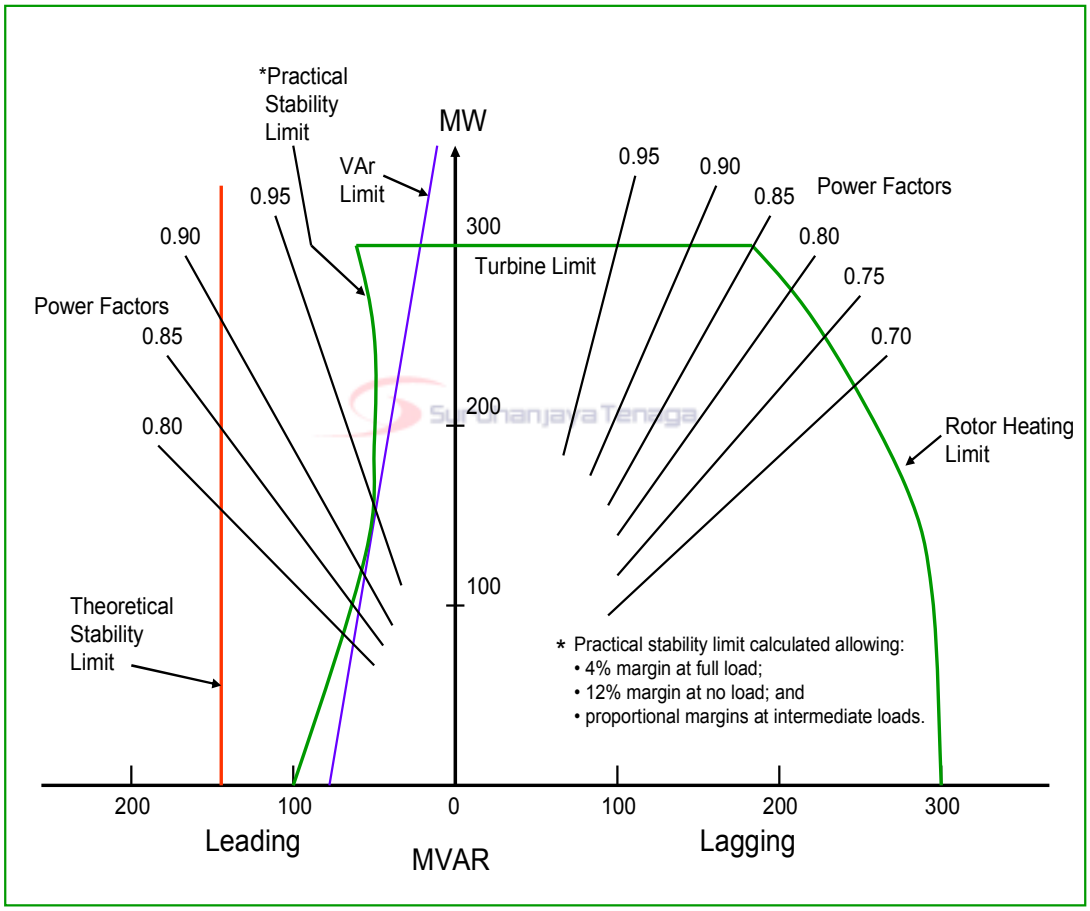

<End of the Operating Code No 2: Outage and Other Related Planning – Appendix 2>

Operating Code 2 Appendix 3 – CCGT Module Matrix – Example Form

CCGT MODULE OUTPUT USABLE MW	**CCGT GENERATING UNITS** AVAILABLE								
	1st GT	2nd GT	3rd GT	4th GT	5th GT	6th GT	1st ST	2nd ST	3rd ST
	OUTPUT USABLE								
	150	150	150				100		
0MW to 150MW	Y								
151MW to 250MW	Y						Y		
251MW to 300MW	Y	Y							
301MW to 400MW	Y	Y					Y		
401MW to 450MW	Y	Y	Y						
451MW to 550MW	Y	Y	Y				Y		

<End of the Operating Code No 2: Outage and Other Related Planning – Appendix 3>

Operating Code No.3 (OC3): Operating Reserves and Response

OC3.1 Introduction

OC3.1.1 The Grid System is required to be operated by the GSO with sufficient Operating Reserve to account for such factors as planned and unplanned outages on the Grid System, inaccuracies in Demand forecasting, frequency regulations in response to changes in load, loss of generation and loss of demand and transmission voltage control requirements.

OC3.1.2 Operating Code No. 3 (OC3) describes the different types of reserves that make up the Operating Reserve the GSO might use in real-time operation of the Grid System in order to maintain the required levels of System Security.

OC3.2 Objectives

OC3.2.1 The objectives of this Code are to:

(1) describe the types of reserves which shall be utilised by the **GSO** pursuant to the Scheduling and Dispatch Codes (SDC);

(2) identify parameters associated with operating reserves typically required by the GSO.

OC3.3 Scope

OC3.3.1 This Code applies to the GSO and the following Users:

(1) Single Buyer;

(2) Generators with CDGUs;

(3) Distributors, Network Operators and Directly Connected Customers who have agreed to undertake Demand Control; and

(4) Interconnected Parties;

OC3.4 Operating Reserves and its Constituents

OC3.4.1 General

OC3.4.1.1 In preparing the Generation Schedule, in accordance with SDC1, the GSO will use the Demand forecasts, as detailed in OC1 and then match generation output to Demand plus Operating Reserve. These reserves are further detailed below.

OC3.4.1.2 These reserves are essential for the stable operation of the Grid System and Generators will have their CDGUs tested from time to time in accordance with OC10 to ensure compliance with the relevant provisions of this Grid Code. Parties offering automatic Demand Control will also be tested from time to time.

OC3.4.1.3 There are two types of Operating Reserve namely Spinning Reserve, and Non-Spinning Reserve. The types and requirements of responses provided by the Operating Reserve are described and specified in OC3.4.2 and OC3.4.3.

OC3.4.2 Spinning Reserves and Responses

OC3.4.2.1 Spinning Reserve is the additional output from synchronised Generating Units or provided for by demand or by Interconnected Systems which are realisable in real time in order to arrest a drop of system frequency due to a loss of generation or a loss of external interconnector or mismatch between generation and demand, and be capable of restoring any Frequency deviation to an acceptable level. In accordance with the time in which the additional MW outputs in the form of Spinning Reserves can be delivered can be summarized as follows:

(1) Primary Response which is an automatic response by a synchronised CDGU to a fall in Grid System Frequency which require changes in the CDGU's output, to arrest the fall of Frequency to within target limits in the Licence Standard, which is fully realisable within ten (10) seconds of a frequency change and fully sustainable for at least a further twenty (20) seconds.

(2) Secondary Response which is the automatic response by a synchronised CDGU to Grid System Frequency change which is fully realisable within thirty (30) seconds from the time of frequency change and must be fully sustainable for a period of at least thirty (30) minutes.

(3) High Frequency Response which is the automatic response by a synchronised CDGU to Grid System Frequency change which is released over a 10s period from the time of the frequency increase.
(4) Demand Following by Automatic Generation Control (AGC) which is the automatic response directed by the control mechanism at NLDC which reduces the error between generation and demand to a minimum by adjusting CDGU outputs.
(5) Response through Interconnector Transfer which is the automatic response available from the Interconnected Parties in response to changes in generation and demand balance in the Grid System.
(6) Demand Response to Frequency Change which is automatically brought about by the changes in generation and demand balance in the Grid System.
(7) Demand Control Response is a reduction in Demand by those parties willing to undertake Demand Control and can be utilised in the timescale they are made available.
(8) Maximum Generation which can be dispatched by the GSO based on the availability declarations made by the Generators.
(9) Emergency Transfer Available from Interconnected Parties.
(10) Fast Response realisable within thirty (30) minutes timescale.
(11) Hot or Warm Standby Units.

OC3.4.2.2 It is noted that whilst items (7), (10), (11) cannot strictly be categorized as Spinning Reserve, nevertheless they contribute to the total portfolio of Operating Reserve.

OC3.4.3 Non-spinning Reserve

OC3.4.3.1 Non-spinning Reserve is the output available from standby Generating Units that can be synchronized and loaded up within one (1) hour when the Generating Unit is warm or hot and a longer timescale when the unit is cold to cater for abnormal Demand increase or further Generating Unit breakdowns.

OC3.5 Provision and Instruction on Operating Reserve

OC3.5.1 Operating Reserve

OC3.5.1.1 The amount of Operating Reserve required at any time will be determined by the GSO having regard to the Demand levels, Generating Plant availability shortfalls and the largest secured loss of generation or loss of import from or sudden export to interconnections.

The GSO shall allocate the Operating Reserve to the various classes of Generating Plants so as to fulfil the required levels of response from the spinning reserve.

OC3.6 Data Requirements

OC3.6.1 The following data related to operating reserves are typically required by the GSO for operational purposes:

(1) Primary Response characteristics to Frequency change data which describes the CDGU's response at different levels of loading up to rated loading;

(2) Secondary Response characteristics to Frequency change data which describes the CDGU's response at different levels of loading up to rated loading;

(3) Governor droop and deadband characteristics expressed as a percentage of Frequency drop; and

(4) CDGU control options for maximum droop, normal droop and minimum droop each expressed as a percentage of Frequency drop.

OC3.6.2 Generators shall register this data, in the format agreed with the Grid Owner and GSO under the Planning Code (PC) which is termed as the Registered Data and verified under OC10 and any revisions thereto shall also be notified under PC and SDC1.

OC3.6.3 The response capability data required for each element of Demand control consists of:

(1) Blocks of Demand which are available for disconnection at specific frequencies;

(2) System Frequency or voltage or conditions at which disconnection is initiated;

(3) Time duration of Frequency or voltage below trip setting at which disconnection is initiated; and

(4) Time delay from trip initiation to disconnection.

OC3.7 Weekly Operational Plan

OC3.7.1 Issue of Weekly Operational Plan

OC3.7.1.1 The Weekly Operational Plan will include an indication of the level of Spinning Reserve to be utilised by the GSO in the Scheduling and Dispatch process in the week beginning with the Schedule Day commencing during the subsequent Monday.

OC3.7.1.2 Each week the GSO shall prepare a Weekly Operational Plan which will run from 0000 hours on the Saturday following to immediately before 2400 hours on the second subsequent Monday and shall be issued by exception to each Generator in relation to that Generator's CDGU when the GSO considers it necessary.

OC3.7.1.3 The Weekly Operational Plan will be in respect of all CDGUs and parties agreeing to participate in Demand control, and describe for each CDGU and each party an indicative requirement of Spinning Reserve or Non-spinning Reserve as the case may be.

OC3.8 Operating Reserves from Interconnected Systems

OC3.8.1 Provision and receipt of Operating Reserve across an interconnector are managed by the Single Buyer. Where the use of an interconnector is considered to be necessary to restore Operating Reserve on the Grid System then this will be determined by the GSO in accordance with the Interconnection Agreement, and communicated to the Single Buyer. Where an Interconnected Party requires the use of the Operating Reserve of the Grid System to meet a sudden failure or shortage on its system then the GSO will take the necessary action to assist and restore the necessary Operating Reserve within the Grid System in accordance with this OC3, as if the loss of reserve had been due to problems within the Grid System.

OC3.8.2 The Energy delivered or received on the basis of the use of the Operating Reserve with an Interconnected Party shall be recorded by the GSO and issued to the Single Buyer at the following Working Day.

<End of the Operating Code No 3: Operating Reserve and Response>

Operating Code No.4 (OC4): Demand Control

OC4.1 Introduction

OC4.1.1 Operating Code No. 4 (OC4) is concerned with the procedures to be followed by the GSO and Users to facilitate Demand Control in the event that insufficient generating capacity is available to meet forecast or real-time Demand, leading to the possibility of frequency excursions outside the limits given in the Planning Code.

OC4.1.2 Demand Control shall include but not limited to the following actions on load or demand:

(1) Automatic load or demand shedding;
(2) Manual load or demand shedding; and
(3) Reduction of load through voltage reduction;

OC4.1.3 In addition, these provisions may be used by the GSO to prevent System thermal overloads or to prevent System voltage collapse on any part of the Grid System.

OC4.2 Objectives

OC4.2.1 The objectives of this OC4 are to:

(1) enable the provision of facilities to allow the GSO to achieve reduction in Demand on the Grid System, in whole or in part;
(2) enable the GSO to instruct Demand Control in a manner that does not unduly discriminate against, or unduly prefer, anyone or any group of Users;
(3) ensure that the GSO is notified of any Demand Control utilised by Users other than following an instruction from the GSO.

OC4.3 Scope

OC4.3.1 This OC4 applies to the GSO, and the following Users:

(1) Generators with CDGUs;
(2) Network Operators;
(3) Grid Owner;
(4) Distributors;
(5) Directly Connected Customers; and
(6) Single Buyer.

OC4.4 Procedure for Notification of Demand Reduction Control

OC4.4.1 The GSO will arrange to have available manual or instructed Demand Shedding and/or disconnection schemes to be employed throughout the Grid System. These schemes are intended for use when it is possible to carry out such Demand Shedding or disconnection in the required timeframe by this means. Such a scheme could also involve 5% or 10% voltage reductions and/or manual or automatic operation of the SCADA switching facilities and/or instructions to Users to disconnect Demand.

OC4.4.2 Each User who has agreed to undertake Demand Shedding, must notify the GSO in writing by September of each year of the integral multiples it will use with effect from the succeeding year onwards. Thereafter, any changes must be notified in writing to the GSO at least ten (10) Business Days prior to the change coming into effect.

OC4.4.3 Appropriate warnings shall be issued by the GSO when there is likely to be a requirement to shed Demand in accordance with OC4.4.4 to OC4.4.8. These warnings will be categorized in accordance with the perceived levels of risk.

OC4.4.4 A Yellow Warning, Probable Risk of Demand Reduction will, where possible, be issued by the GSO, one (1) week before the anticipated event, when the GSO anticipates that it will or may instruct Users to implement Demand Reduction, providing in writing the percentage level of Demand Reduction it may wish to instruct from each User.

OC4.4.5 An Orange Warning, High Risk of Demand Reduction will, where possible, be issued by the GSO, twenty four (24) hours before the event, in writing, when the GSO anticipates that it will or may instruct Users to implement Demand Reduction.

OC4.4.6 A Red Warning, Extremely High Risk of Demand Reduction will, where possible, be issued by the GSO, thirty (30) minutes before the event, by telephone instructions, by fax or in writing, when the GSO anticipates that it will or may instruct Users to implement Demand Reduction.

OC4.4.7 It may also be necessary for the GSO to issue a warning of possible Demand Reduction to cover a local situation where the risk of serious overloading is foreseen on the Plant or Apparatus of Power Stations or Transmission System in a particular section of the System. Such warnings will be issued as Yellow, Orange or Red warnings but specific to the locality.

OC4.4.8 The purpose of warnings is to obtain the necessary Demand relief required with the least possible inconvenience to Consumers and, to that end, to ensure that response to requests for disconnection is both prompt and effective. Demand Reduction will, however, be required without warning if unusual and unforeseeable circumstances create severe operational problems.

OC4.5 Procedure for Implementation of Demand Control

OC4.5.1 During the implementation of Demand Control, Scheduling and Dispatch in accordance with the principles in the SDCs may cease and will not be re-implemented until the GSO decides that normal operation can be resumed. The GSO will inform Generators with CDGUs when normal Scheduling and Dispatch in accordance with the SDCs is to be reimplemented, as soon as reasonably practicable.

OC4.5.2 Demand control will be achieved by telephone instructions in the case of instructed Demand Control, to each relevant User and by direct switching by the GSO in the case of manual Demand control.

OC4.5.3 Whether a Yellow, Orange or Red warning has been issued or not each relevant User shall abide by the instructions of the GSO with regard to Demand Reduction without delay.

OC4.5.4 The Demand Reduction must be achieved within the System of each Network Operator as far as possible uniformly across all Grid Supply Points unless otherwise instructed by the GSO.

OC4.5.5 Each User shall abide by the instructions of the GSO with regard to the restoration of Demand under this OC4.5 without delay. The User shall not restore Demand until it has received such instruction. The restoration of Demand must be achieved as soon as possible and the process of restoration must begin within two (2) minutes of the instruction being given by the GSO.

OC4.5.6 In circumstances of protracted shortage of generation or where a statutory instruction has been given (e.g. a fuel security period) and when a reduction in Demand is envisaged by the GSO to be prolonged, the GSO will notify the relevant Users of the expected duration.

OC4.5.7 Each relevant User will notify the GSO in writing that it has complied with instructions of the GSO under this OC4.5, within ten (10) minutes of so doing, together with an estimation of the Demand Reduction or restoration achieved, as the case may be.

OC4.6 Under-Frequency Load or Demand Shedding

OC4.6.1 The GSO shall make all necessary studies, arrangement and coordination to ensure sufficient quantum of automatic under frequency load shedding which is likely to be around 60% of the Grid System total peak Demand or otherwise as determined by the GSO in accordance with the requirements of the Grid System. The purpose of this is to seek to limit the consequences of a major loss of generation or an event on the Total System which leaves part or all of the Total System with a generation deficit.

OC4.6.2 Each User shall upon the instruction of the GSO implement, test, and maintain automatic frequency load shedding to the quanta as specified by GSO and confirmed in writing. The general characteristics of the type of equipment by which these quanta of load shedding shall be achieved will be in accordance with Appendix 4 of the CC.

OC4.6.3 The GSO shall monitor the availability of the quanta of load shedding using data from system disturbances and review the overall quanta at least once every three (3) years. Users shall make available all the data by which the GSO can monitor the performance of their load shedding schemes.

OC4.6.4 The load or demand of each User (instructed by the GSO to implement UFLS) which is subject to Under Frequency Load Shedding will be split

into discrete MW blocks. The number, location, size and the associated low Frequency Relay settings (frequency and time settings) of these blocks, will be as specified by the GSO following discussion with the User and will be reviewed in accordance with OC4.6.3 by the GSO. The distribution of the blocks will be such as to give a reasonably uniform disconnection within the System of the User across all Grid Supply Points.

OC4.6.5 Once under frequency load/demand shedding has taken place, the User on whose System it has occurred, will not reconnect until the GSO instructs that User to do so. Once the Frequency has recovered, each User will abide by the instructions of the GSO with regard to reconnection without delay.

OC4.6.6 Reconnection must be achieved as soon as possible and the process of reconnection must begin within two (2) minutes of the instruction being given by the GSO. The User will notify the GSO with an estimation of the Demand Reduction which has occurred under automatic under Frequency load shedding and similarly notify the restoration in each case within five (5) minutes of the disconnection or restoration.

OC4.7 Automatic Under Voltage Demand or Load Shedding

OC4.7.1 The GSO shall make all necessary studies, arrangement and coordination to ensure sufficient quanta of automatic under voltage load shedding which is likely to be around 15% of the Grid System total peak Demand or otherwise as determined by the GSO in accordance with the requirements of the Grid System. The purpose of this is to seek to limit the consequences of potential voltage instability.

OC4.7.2 Each User shall upon the instruction of the GSO implement, test, and maintain automatic under voltage load shedding to the quanta as specified by GSO and confirmed in writing. The general characteristics of the type of equipment by which these quanta of load shedding shall be achieved will be in accordance requirements of the CC.

OC4.7.3 The GSO shall monitor the availability of the quanta of load shedding using data from system disturbances and review the overall quanta at least once every three (3) years. Users shall make available all the data by which the GSO can monitor the performance of their load shedding schemes.

OC4.7.4 The load or demand of each User (instructed by the GSO to implement UVLS) which is subject to Under Voltage Load Shedding will be split into discrete MW blocks. The number, location, size and the associated low Voltage relay settings (voltage and time settings) of these blocks, will be as specified by the GSO following discussion with the User and will be reviewed in accordance with OC4.7.3 by the GSO. The distribution of the blocks will be such as to give a reasonably uniform disconnection within each area of the System across all Grid Supply Points.

OC4.7.5 Once under voltage load/demand shedding has taken place, the User on whose System it has occurred, will not reconnect until the GSO instructs that User to do so. Once the voltage has recovered, each User will abide by the instructions of the GSO with regard to reconnection without delay.

OC4.7.6 Reconnection must be achieved as soon as possible and the process of reconnection must begin within two (2) minutes of the instruction being given by the GSO. The User will notify the GSO with an estimation of the Demand Reduction which has occurred under automatic under voltage load shedding and similarly notify the restoration in each case within five (5) minutes of the disconnection or restoration.

OC4.8 Emergency Manual Load or Demand Shedding or Disconnection

OC4.8.1 Each User will make arrangements that will enable it, following an instruction from the GSO, to disconnect loads under emergency conditions irrespective of Frequency within twenty (30) minutes. It must be possible to apply the Demand disconnections to individual or specific groups of Grid Supply Points, as determined by the GSO.

OC4.8.2 Each User shall provide the GSO in writing by the end of September in each year, in respect of the next following year, on a Grid Supply Point basis, with the following information as set out in a tabular format in the Appendix 1, its total peak Demand and the percentage value of the total peak Demand that can be disconnected (and in the case of that in the first five (5) minutes it must include that which can also be reduced by voltage reduction) within timescales of 5/10/15/20/25/30 minutes.

OC4.8.3 Each User shall abide by the instructions of the GSO with regard to disconnection under this OC4.8 without delay, and the disconnection

must be achieved as soon as possible after the instruction being given by the GSO, and in any case, within the timescale registered in this OC4.8. The instruction may relate to an individual Grid Supply Point and/or groups of Grid Supply Points.

OC4.8.4 The GSO will notify a User who has been instructed under this OC4.8, of what has happened on the Transmission System to necessitate the instruction, in accordance with the provisions of OC5.

OC4.8.5 Once a disconnection has been applied by a User at the instruction of the GSO, that User shall not reconnect until the GSO instructs it to do so.

OC4.8.6 Each User shall abide by the instructions of the GSO with regard to reconnection under OC4.8 without delay, and shall not reconnect until it has received such instruction and reconnection must be achieved as soon as possible and the process of reconnection must begin within two (2) minutes of the instruction being given by the GSO.

OC4.8.7 The GSO may itself disconnect manually and reconnect Directly Connected Customers as part of a Demand control requirement under emergency conditions.

OC4.8.8 If the GSO determines that emergency manual disconnection referred to in this OC4.8 is inadequate, the GSO may disconnect Network Operators and/or Directly Connected Customers at Grid Supply Points, to preserve the security of the Transmission System.

OC4.8.9 Each Network Operator will supply to the GSO details of the amount of Demand Reduction or restoration actually achieved.

OC4.9 Rota Demand Control for Managing Longer Term Emergencies

OC4.9.1 As well as reducing Demand, with the objective of preventing any overloading of Apparatus and/or when there is insufficient generation to meet forecast Demand, or in the event of fuel shortages and/or water shortages at hydro-CDGUs, the GSO may utilise this OC4.9 to initiate Demand disconnections.

OC4.9.2 The GSO in coordination with the Users will prepare rota disconnection plans for levels of Demand disconnection in accordance with plans

drawn up by the GSO. These plans will be reviewed at least once in three (3) years or as and when necessary.

OC4.9.3 Rota disconnection will be applied following and in accordance with the warning system specified in OC3.

OC4.10 Scheduling and Dispatch

OC4.10.1 During Demand control, Scheduling and Dispatch in accordance with normal operation may cease and will not be re-implemented until the GSO decides, in each case in accordance with the provisions of the SDCs. The GSO will inform Users of the schedule.

<End of the Operating Code No 4: Demand Control Main Text>

Operating Code 4 - Appendix 1

EMERGENCY MANUAL DEMAND REDUCTION/DISCONNECTION SUMMARY SHEET
(As set out in OC4.8)

NETWORK OPERATOR/ Distributor _____ [YEAR]
PEAK:_____

Grid Supply Point (Name)	**Peak MW**	**% of Group Demand Disconnection (and /or Reduction in the Case of The First 5 Minutes (Cumulative)**						**Remarks**
		TIME (MINS)						
		5	10	15	20	25	30	

Notes: 1. Data to be provided annually by the end of September to cover the following year.

<End of the Operating Code No 4: Demand Control – Appendix 1>

Operating Code No.5 (OC5): Operational Liaison

OC5.1 Introduction

OC5.1.1 Operating Code No. 5 (OC5) sets out the requirements for maintaining communication and for the exchange of information in relation to the operations and or Events on the Grid System or a User System which have had or may have an Operational Effect on the Grid System or other User Systems.

OC5.2 Objectives

OC5.2.1 The objectives of this OC5 are:

(1) to provide for the exchange of information that is needed in order that possible risks arising from the Operations and or Events on the Grid System and or User Systems can be assessed and appropriate action taken;

(2) to detail the communication facilities required between the GSO and each category of User;

(3) provide a framework for information flow and discussion for Commissioning Tests and Compliance tests; and

(4) to detail the general procedures that will be established to authorise personnel who will initiate or carry out operations on the User System.

OC5.3 Scope

OC5.3.1 This OC5 applies to the GSO and the following Users:

(1) Generators with CDGUs;

(2) Grid Owner;

(3) Network Operators;

(4) Distributors;

(5) Directly Connected Customers where the GSO considers it necessary; and

(6) Interconnected Parties.

OC5.3.2 This OC5 does not seek to deal with any actions arising from the exchange of information but rather only with that exchange.

OC5.4 Operational Liaison Terms

OC5.4.1 Within this OC5 the term "Operation" means a previously planned and instructed action relating to the operation of any Plant or Apparatus that forms a part of the Grid System.

OC5.4.2 Within this OC5 the term "Event" means an unscheduled or unplanned (although it may be anticipated) occurrence on, or relating to, a System including faults, incidents and breakdowns, and adverse weather conditions being experienced.

OC5.4.3 Within this OC5 the term "Operational Effect" means any effect on the operation of the relevant System which will or may cause the Grid System or other User Systems to operate (or be at a materially increased risk of operating) differently to the way in which they would or may have normally operated in the absence of that effect.

OC5.5 Procedures for Operational Liaison

OC5.5.1 The GSO and Users shall nominate persons and contact locations and agree on the communication channels to be used in accordance with the Connection Code (CC) for the necessary exchange of information to make effective the exchange of information required by the provisions of this OC5. There may be a need to specify locations where personnel can operate, such as Power Stations, control centres etc., and manning levels to be required, for example, 24 hours, official holiday cover etc. These arrangements may have been agreed upon producing the Site Responsibility Schedule pursuant to the CC.

OC5.5.2 In general, all Users including Network Operators will liaise with the GSO to initiate and establish any required communication channel between them.

OC5.5.3 SCADA equipment, remote terminal units or other means of communication specified in the CC may be required at the User's site for the transfer of information to and from the GSO. As the nature and configuration of communication equipment required to comply with will vary between each category of User connected to the System, it will be necessary to clarify the requirements in the relevant Agreement. Information between the GSO and the Users shall be exchanged on the reasonable request from either party.

OC5.6 Requirements to Notify

OC5.6.0 General Requirements

OC5.6.0.1 In the case of an Operation or Event on the User System which will have or may have an Operational Effect on the Grid System or other User Systems, the User shall notify the GSO in accordance with this OC5.5.

OC5.6.0.2 The GSO shall inform other Users who in its reasonable opinion may be affected by that Operational Effect.

OC5.6.1 Situations Requiring Notifications

OC5.6.1.1 While in no way limiting the situations and or conditions requiring notification, the GSO and Users shall agree to review from time to time the Operations and Events which are required to be notified.

OC5.6.1.2 Examples of Operations where notification by the GSO or Users may be required under OC5 are:

(1) the implementation of planned outage of Plant or Apparatus pursuant to OC2;
(2) issue of dispatch instruction;
(3) the operation of circuit breaker or isolator/disconnector;
(4) confirmation of planned outage

OC5.6.1.3 Examples of Events where notification by the GSO or Users may be required under this OC5 are:

(1) the operation of Plant and/or Apparatus in excess of its capability or may present a hazard to personnel;
(2) activation of alarm or indication of an abnormal operating condition;
(3) adverse weather condition;
(4) breakdown of, or faults on, or temporary changes in, the capability of Plant and/or Apparatus;
(5) increased risk of unplanned protection operation;
(6) abnormal operating parameters, such as a governor problem, fuel system trouble, or low/high temperatures; and
(7) loss of communication - SCADA

OC5.6.2 Form of Notification

OC5.6.2.1 A notification under this OC5 shall be of sufficient detail to describe the Operation or Event that might lead or have led to an Operational Effect on the relevant Systems, although it does not need to state the cause. This is to enable the recipient of the notification to reasonably consider and assess the implications or risks arising from it. The recipient may seek to clarify the notification.

OC5.6.2.2 This notification may be in writing if the situation permits it, otherwise, the other agreed communication channels in OC5.4 shall be used.

OC5.6.3 Timing of Notification

OC5.6.3.1 A notification under OC5 for Operations which will have or may have an Operational Effect on the relevant Systems shall be provided as far in advance as practicable to allow the recipient to consider the implications and risks which may or will arise from it.

OC5.6.3.2 A notification under this OC5 for Events which will have or may have or have had an Operational Effect on the relevant Systems shall be provided within three (3) Business Days after the occurrence of the Event or as soon as practicable after the Event is known or anticipated by the person issuing the notification.

OC5.7 Significant Incidents

OC5.7.1 Where an Event on the Transmission System has had or may have had a significant effect on the User System or when an Event on the User System has had or may have had a significant effect on the Transmission System or other User Systems, the Event shall be deemed a Significant Incident by GSO in consultation with the User.

OC5.7.2 Significant Incidents shall be reported in writing to the affected party in accordance with OC6.

OC5.7.3 Without limiting the general description set out in this OC5.7, a Significant Incident will include Events having an Operational Effect which result in, or may result in, the following:

(1) Voltage outside statutory limits;
(2) Frequency outside statutory limits; or
(3) System instability.

OC5.8 GSO System Warnings

OC5.8.1 Roles of GSO System Warnings

OC5.8.1.1 GSO System Warnings as described below provide information relating to System conditions or Events and are intended to:

(1) alert Users to possible Grid System problems and/or Demand Reductions;
(2) inform of the applicable period;
(3) indicate intended consequences for Users; and
(4) enable specified Users to be in a state of readiness to react properly to instructions received from GSO.

OC5.8.2 Recipients of GSO System Warnings

OC5.8.2.1 Where GSO System Warnings are applicable to System (except those relating to Demand Control Imminent) conditions or Events which have widespread effect, GSO will notify relevant Users under this OC5.8.

OC5.8.2.2 Where in the considered opinion of the GSO, System conditions or Events may only have a limited effect, the GSO System Warning will only be issued to those Users who are or may in the judgement of the GSO be affected.

OC5.8.2.3 Where a GSO System Warning - Demand Control Imminent is issued it will only be sent to those Users who are likely to receive Demand Control instructions from the GSO.

OC5.8.3 Preparatory Action

OC5.8.3.1 Where possible, and if required, recipients of the warnings should take such preparatory action as they deem necessary taking into account the

information contained in the GSO System Warning. All warnings will be of a form determined by the GSO and will remain in force from the stated time of commencement until the cancellation, amendment or re-issue, as the case may be, is notified by the GSO.

OC5.8.3.2 Where a GSO System Warning has been issued to a Network Operator and is current, Demand Control should not (subject as provided below) be employed unless instructed by the GSO. If Demand Control is, however, necessary to preserve the integrity of the Network Operator's System, then the impact upon the integrity of the Total System should be considered by the Network Operator and where practicable discussed with the GSO prior to its implementation.

OC5.8.3.3 GSO System Warnings will be issued by telephone instructions, by fax, to the facsimile number(s) and locations agreed between GSO and Users, or by such electronic data transmission facilities as have been agreed.

OC5.8.3.4 Users may at times be informed by telephone or other means of GSO System Warnings and in these circumstances confirmation will be sent to those Users so notified, by fax as soon as possible.

OC5.8.4 Types of GSO System Warnings

OC5.8.4.1 GSO System Warnings include warnings related to the conditions of the Grid Systems as well as the colour coded warnings associated with Demand Controls as specified in OC4.4.

OC5.8.4.2 System Warnings related to the conditions of the system are:

(1) Blue Warning - Inadequate System Margin
(2) Brown Warning - Risk of System Disturbance

OC5.8.4.3 System Warnings related to Demand Controls are:

(3) Yellow Warning - Probable Risk of Demand Reduction;
(1) Orange Warning - High Risk of Demand Reduction; and
(2) Red Warning - Extremely High Risk of Demand Reduction or Demand Control Imminent

The above warnings are specified in OC4.4.

OC5.8.5 Issuance of System Warnings

OC5.8.5.1 A Blue Warning - Inadequate System Margin may be issued to Users in accordance with OC5.8.2, at times when there is inadequate System Margin. It will contain the following information:
(1) the period for which the warning is applicable; and
(2) the availability shortfall in MW; and
(3) intended consequences for Users.

OC5.8.5.2 An Orange Warning - High Risk of Demand Reduction may be issued to Users in accordance with OC5.8.2 at times when there is inadequate System Margin, as determined and in the judgement of GSO there is increased risk of Demand Reduction being implemented under OC4.5. It will contain the following information in addition to the required information in a Blue Warning - Inadequate System Margin:
(1) the possible percentage level of Demand Reduction required; and
(2) Specify those Users who may subsequently receive instructions under OC4.5.

OC5.8.5.3 An Orange Warning - High Risk of Demand Reduction may also be issued by the GSO to those Users who may subsequently receive instructions under OC4.5 relating to a Demand Reduction in circumstances not related to inadequate System Margin (for example Demand Reduction required to manage System overloading).

OC5.8.5.4 The Orange Warning - High Risk of Demand Reduction will specify the period during which Demand Reduction may be required and the part of the Total System to which it applies.

OC5.8.5.5 Whenever the GSO anticipates that a protracted period of generation shortage may incur a Blue or an Orange Warning - Inadequate System Margin or High Risk of Demand Reduction may be issued, to give as much notice as possible to those Users who may subsequently receive instructions under OC4.5. An Orange Warning - High Risk of Demand Reduction will in these instances include an estimate of the percentage of Demand Reduction that may be required and the anticipated duration of the Demand Reduction. It may also include information relating to estimates of any further percentage of Demand Reduction that may be required.

OC5.8.5.6 The issue of the GSO System Warnings is intended to enable recipients to plan ahead on the various aspects of Demand Reduction.

OC5.8.5.7 A Red Warning - Demand Control Imminent, relating to a Demand Reduction under OC4.5, will be issued by the GSO to Users in accordance with OC5.8.2. It will specify those Users who may subsequently receive instructions under OC4.5. The Red Warning need not be preceded by any other GSO System Warning and will be issued when a Demand Reduction is expected within the following thirty (30) minutes, but will not cease to have effect after thirty (30) minutes from its issue. However, the GSO will either reissue the Red Warning or cancel the Red Warning no later than two (2) hours from first issue, or from re-issue, as the case may be.

OC5.8.5.8 A Brown Warning - Risk of System Disturbance will be issued by the GSO to Users who may be affected when the GSO knows there is a risk of widespread and serious disturbance to the whole, or part of, the Grid System. The Brown Warning will contain such information as the GSO deems appropriate.

OC5.8.5.9 For the duration of the Brown Warning, each User in receipt of the Brown Warning shall take the necessary steps to warn its operational staff and to maintain its Plant and/or Apparatus in the condition in which it is best able to withstand the anticipated disturbance. During the period that the Brown Warning is in effect, Scheduling and Dispatch will need to take account of the System conditions in accordance with the provisions of the SDCs.

OC5.8.6 Cancellation of GSO System Warning

OC5.8.6.1 The GSO will give notification of a Cancellation of GSO System Warning to all Users issued with the GSO System Warning when in the judgement of the GSO, System conditions have returned to normal.

OC5.8.6.2 A Cancellation of GSO System Warning will identify the type of GSO System Warning being cancelled and the period for which it was issued. The Cancellation of GSO System Warning will also identify any GSO System Warnings that are still in force.

OC5.8.7 General Management of GSO System Warnings

OC5.8.7.1 GSO System Warnings remain in force for the period specified unless superseded or cancelled by the GSO. A GSO System Warning issued for a particular period may be superseded by further related warnings.

OC5.8.7.2 In circumstances where it is necessary for the period of a GSO System Warning to be changed:

(1) the period applicable may be extended by the issue of a GSO System Warning with a period which follows on from the original period, or

(2) revised or updated GSO System Warnings will be issued where there is an overlap with the period specified in an existing GSO System Warning, but only if the revised period also includes the full period of the existing GSO System Warning.

In any other case the existing GSO System Warning will be cancelled and a new one issued.

OC5.8.7.3 A GSO System Warning is no longer applicable once the period has passed and to confirm this GSO will issue a Cancellation of GSO System Warning.

OC5.9 Procedure for Information Flow During Commissioning and Compliance Tests

OC5.9.1 General

OC5.9.1.1 This section of the Grid Code deals with information flow during Commissioning Tests and Compliance Tests. It is designed to provide a framework for the exchange of relevant information and for discussion between the Single Buyer, Grid Owner and GSO and certain Users in relation to Commissioning Tests and Compliance Tests.

OC5.9.1.2 Commissioning Tests and Compliance Tests are carried out in accordance with the provisions of this OC5.9, at a User site or NLDC, and will normally be undertaken during commissioning or re-commissioning of Plant and/or Apparatus.

OC5.9.1.3 In the case of a Commissioning Tests, notification must be made where the test may, in the reasonable judgement of the person wishing to perform the test, cause, or have the potential to cause, an Operational Effect on a part or parts of the Total System but which with prior notice is unlikely to have a materially adverse effect on any part of the Total System, and may form part of an agreed programme of work.

OC5.9.1.4 In the case of a Compliance Tests, notification of the requirement will be made by the GSO to the User.

OC5.9.2 Notification

OC5.9.2.1 In order to undertake a Commissioning or Compliance Test, the User or the GSO or the Single Buyer, as the case may be, (the proposer) must notify the other (the recipient) of a proposed Commissioning or Compliance Test. Reasonable advance notification must be given, taking into account the nature of the test and the circumstances which make the test necessary. This will allow recipients time to adequately assess the impact of the Commissioning or Compliance Test on their System.

OC5.9.2.2 The notification of the Commissioning Test, the test should be incorporated as part of any overall commissioning programme agreed

between the Single Buyer, GSO and Grid Owner and the User, and must normally include the following information:

(1) the proposed date and time of the Commissioning Test;
(2) the name of the individual and the organisation proposing the Commissioning Test;
(3) a proposed programme of testing; and
(4) such further detail as the proposer reasonably believes the recipient needs in order to assess the effect the Commissioning Test may have on relevant Plant and/or Apparatus.

OC5.9.2.3 The notification of the Compliance Test must normally include the following information:

(1) a proposed period in which the GSO or the Single Buyer proposes that Compliance Test should take place;
(2) a proposed programme of testing.

The recipient of notification of a Compliance Test must respond within a reasonable timescale prior to the start time of the Compliance Test and will not unreasonably withhold or delay acceptance of the Compliance Test proposal.

OC5.9.2.4 Where the Single Buyer and GSO receives notification of a proposed Commissioning Test from a User, the GSO will consult those other Users whom it reasonably believes may be affected by the proposed Commissioning Test to seek their views. Information relating to the proposed Commissioning Test may be passed on by the GSO with the prior agreement of the Test Proposer. However it is not necessary for the GSO to obtain the agreement of any such User as Commissioning Tests should not involve the application of irregular, unusual or extreme conditions. The GSO may however consider any comments received when deciding whether or not to agree to a Commissioning Test.

OC5.9.2.5 The response from the recipient, following notification of a Commissioning Test must be one of the following:

(1) to accept the Commissioning Test proposal;
(2) to accept the Commissioning Test proposal conditionally subject to minor modifications such as date and time;
(3) not to agree to the Commissioning Test, but to suggest alterations to the detail and timing of the Commissioning Test that is necessary to make the Commissioning Test acceptable.

OC5.9.3 Final confirmation

OC5.9.3.1 The date and time of a Commissioning or Compliance Test will be confirmed between the GSO, the User, the Grid Owner and the Single Buyer together with any limitations and restrictions on operation of Plant and/or Apparatus.

OC5.9.3.2 The Commissioning or Compliance Test may subsequently be amended following discussion and agreement between the GSO, the User, the Grid Owner and the Single Buyer.

OC5.9.4 Execution

OC5.9.4.1 Commissioning or Compliance Tests may only take place when agreement has been reached and must be carried out in accordance with the agreed programme of testing and the provisions of the relevant Agreement.

OC5.9.4.2 The implementation of a Commissioning or Compliance Test will be notified in accordance with OC5.9.2.

OC5.9.4.3 Where elements of the programme of testing change during the Commissioning or Compliance Test, there must be discussion between the appropriate parties to identify whether the Commissioning or Compliance Test should continue.

<End of the Operating Code No 5: Operational Liaison>

Operating Code No.6 (OC6): Significant Incident Reporting

OC6.1 Introduction

OC6.1.1 Operating Code No. 6 (OC6) sets out the requirements for reporting of Significant Incidents.

OC6.2 Objectives

OC6.2.1 The objective of OC6 is to:

(1) facilitate the provision of detailed information in reporting Significant Incidents.

OC6.3 Scope

OC6.3.1 This OC6 applies to the GSO and the following Users:

(1) All Generators with CDGUs;
(2) Grid Owner;
(3) Distributors;
(4) Network Operators;
(5) All Generators with Generating Units not subject to Dispatch by the GSO, with total on-site generation capacity of not less than 30 MW where the GSO considers it necessary;
(6) Directly Connected Customers where the GSO considers it necessary;
(7) Interconnected Parties; and
(8) Single Buyer.

OC6.4 Procedures

OC6.4.1 Procedures for Reporting Significant Incidents

OC6.4.1.1 While in no way limiting the general requirements to report Significant Incidents under OC6, a Significant Incident will include Events having an Operational Effect that will or may result in the following:

(1) Abnormal operation of plant and/or apparatus;
(2) System voltage outside Normal Operating Condition limits;
(3) Frequency outside Normal Operating Condition limits; and
(4) System instability.

OC6.4.1.2 The GSO and Users shall nominate persons and/or contact locations and communication channels to ensure the effectiveness of OC6, such persons or communication channels may be the same as those established in OC5. For any change in relation to the nominated persons, the contact locations and the communication channels, the GSO and Users shall promptly inform each other in writing.

OC6.4.1.3 In the case of an Event which has been reported to the GSO under OC5 by the User and subsequently determined to be a Significant Incident by the GSO and Single Buyer, a written report shall be given to the GSO and Single Buyer by the User involved in accordance with OC6.4.2.

OC6.4.1.4 In the case of an Event which has been reported to the User under OC5 by the GSO and subsequently determined to be a Significant Incident by the GSO, a written report shall be given to the User involved by the GSO in accordance with OC6.4.2.

OC6.4.1.5 In all cases, the GSO shall be responsible for the compilation of the final report before issuing to relevant parties, including the Energy Commission.

OC6.4.2 Significant Incident Report

OC6.4.2.1 The report on the Significant Incident shall be in writing or any other means mutually agreed between the two parties and shall contain:

(1) confirmation of the notification given under OC5;
(2) a more detailed explanation or statement relating to the Significant Incident from that provided in the notification given under OC5; and

(3) any additional information which has become known with regards to the Significant Incident since the notification was issued.

OC6.4.2.2 The report shall as a minimum contain the following details:

(1) Date, time and duration of the Significant Incident;
(2) Location;
(3) Apparatus and or Plant involved;
(4) Description of the Significant Incident under investigation and its cause; and
(5) Conclusions and recommendations of corrective and preventive actions, if applicable.

OC6.4.2.3 A written report shall be prepared as soon as reasonably practical after the initial notification under OC5.

OC6.4.2.4 In general, the GSO will request the relevant User for a preliminary written report under OC6 within four (4) hours of being aware of any such Significant Incidents. The User will then have to investigate the cause of the incident and to take any corrective measures necessary, and submit the formal written report within three (3) Business Days. When a User requires more than three (3) Business Days to report an occurrence of a Significant Incident, the User may request additional time up to two (2) calendar months from the GSO to carry out the relevant investigations and submit the final report.

OC6.4.2.5 If the Significant Incident occurred on the Grid System, the GSO will submit a preliminary report to the Energy Commission within three (3) Business Days of the Significant Incident and the final report within two (2) calendar months.

<End of the Operating Code No 6: Significant Incident>

Operating Code No.7 (OC7): Emergency Operations

OC7.1 Introduction

OC7.1.1 Operating Code No. 7 (OC7) is concerned with the operation of the Grid System by the GSO under Grid System Emergency Conditions.

OC7.1.2 Grid System Emergencies are any of the following situations:

(1) A Total Blackout or Partial Blackout of the Grid System;
(2) Imminent occurrence of disruption of supply;
(3) The separation into one or more Power Islands of the Grid System with associated loss of synchronisation due to the activation of an automatic de-coupling scheme or the unexpected tripping of parts of the Grid System;
(4) Voltage collapse of part of the Grid System;
(5) The loss of a strategic transmission group due to adverse Weather condition, environmental emergencies including haze, sabotage etc.;
(6) Fuel supply emergency; or
(7) Loss of the NLDC.

OC7.2 Objectives

OC7.2.1 The objectives of this OC7 are:

(1) to ensure that in the event of Grid System Emergencies normal supplies are restored to all Consumers as quickly and as safely as practicable in accordance with Prudent Utility Practice;
(2) to outline the general contingency and restoration strategies which shall be adopted by the GSO in this event; and
(3) to initiate the communication procedures, specified in OC5, between the GSO and relevant Users when System Emergency is anticipated to occur or when a Critical Incident is imminent or has occurred.

OC7.3 Scope

OC7.3.1 OC7 applies to GSO and the following Users:
(1) Generators with CDGUs;
(2) Generators with Black Start capability;
(3) Network Operators;
(4) Distributors;
(5) Grid Owner;
(6) Directly Connected Customers identified by the GSO who may be involved in the restoration or re-synchronisation process; and
(7) Interconnected Parties

OC7.4 Procedures

OC7.4.0 General

OC7.4.0.1 The GSO shall establish, maintain and regularly review a "Grid System Restoration Plans" in conjunction with Users, which can be called into action immediately during Grid System Emergencies.

OC7.4.0.2 In relation to the requirement in OC7.4.0.1, all Users shall also establish, maintain and regularly review their respective “Restoration Plans” and in doing so must be aware of the of the Grid System requirements through consultation with the GSO.

OC7.4.0.3 It is important that all Users identified under OC7.3 make themselves fully aware of contingency requirements, as failure to act in accordance with the instructions of the GSO will risk further disruptions to the Grid System and, potentially, supplies to all Consumers.

OC7.4.1 Determination of Emergency Conditions

OC7.4.1.1 The GSO will activate the "Grid System Restoration Plans" when, any of the following has occurred:
(1) Data arriving at the NLDC indicating a Transmission System split or the existence of a risk to Plant or Apparatus which requires that Plant or Apparatus to be off-loaded or shutdown, which itself constitutes a Critical Incident;

(2) Reports or data from Power Stations that a CDGU has tripped or needs to be offloaded which constitutes a Critical Incident;
(3) Reports or data via the SCADA system that indicates a Partial Blackout or Total Blackout may be imminent or exists;
(4) Loss of NLDC;
(5) Fuel supply Emergencies;
(6) Report from the field staff or Users or Public of imminent danger to Critical Installation of the Grid System;
(7) Adverse weather conditions; or
(8) Reports of fire affecting or may be affecting critical installations of the Grid System, imminent tower collapse, bomb threat etc.

OC7.4.2 Grid System Restoration Plan

OC7.4.2.1 The "Grid System Restoration Plan" will serve as a guide during System Emergencies and will outline the operational structure to facilitate a safe and prompt restoration process and avoidance of disruption of supplies.

OC7.4.2.2 The “Grid System Restoration Plans” will also address the restoration priorities of the different Consumer groups and also the ability of each CDGU to accept sudden loading increases due to the re-energising of Demand blocks.

OC7.4.2.3 Certain Power Stations will be registered as "Black Start Stations" having a capability for at least one of their CDGUs to Start-Up from Shutdown and to energise a part of the Total System, or be Synchronised to the System, upon instruction from the GSO within the shortest reasonable time, without an external electrical power supply.

OC7.4.2.4 The generic tasks outlined in the “Grid System Restoration Plans” are:
(1) if communication is cut off, the re-establishment of full communications between parties;
(2) the determination of the status of the post Critical Incident system including the status and condition of HV Apparatus and Plant;
(3) actions and instructions to Users for restoration or recovery of Grid System from imminent disruption of supplies;
(4) actions and instructions to Users for restoration of Grid System from loss of supplies;
(5) instructions by the GSO to the relevant parties;
(6) coordination procedures between adjacent Users;

(7) mobilisation and assignment of priorities to personnel;
(8) preparation of Power Stations and the Transmission System for systematic restoration;
(9) re-energisation of Power Islands using Black Start Stations if necessary;
(10) re-synchronisation of the various Power Islands to restore the interconnected Grid System;
(11) staffing levels requirements during emergencies;
(12) priority of categories of loads to restored as determined by the GSO; and
(13) an audit of the Transmission System after restoration to ensure that the overall Transmission System is back to normal and all Demand is connected, and in line with the reporting requirements of OC6 all data has been collected for reporting purposes.

OC7.4.2.5 The "Grid System Restoration Plans" shall be developed and maintained by the GSO and Users as appropriate. The GSO will issue the "Grid System Restoration Plans" and subsequent revisions to appropriate Users and other relevant parties.

OC7.4.2.6 The implementation of the "Grid System Restoration Plans" may not be in the order as defined in the plan and this will up to the discretion of the GSO.

OC7.4.3 Restoration Procedures

OC7.4.3.1 The procedure for the "Grid System Restoration Plans" shall be that notified in writing by the GSO to the User for use at the time of System Emergencies.

OC7.4.3.2 Each User shall abide by the GSO's instructions during the restoration process, unless to do so would endanger life or would cause damage to Plant or Apparatus.

OC7.4.3.3 To expedite restoration in the event of an area shutdown of generating capability, each System should set up necessary operating instructions and procedures to cover emergency conditions, including loss of communications.

OC7.4.3.4 Due to the complexities and uncertainties of recovery from total or partial System collapse, the contingency plans must be in place to

address the overall strategy of restoration and management of the process. These plans form the "Grid System Restoration Plans".

OC7.4.3.5 During total or partial collapse and during subsequent recovery, the Transmission System may be operated outside normal voltage and Frequency standards. In total or partial collapse and during the subsequent recovery, the normal Schedule and Dispatch process will cease and will only be re-implemented under instruction of the GSO.

OC7.4.3.6 Generators shall, in consultation with the GSO, set up their own contingency plans to cater for normalization of their own system after a total or partial collapse in their area. All contingency plans have to be reviewed and updated once in three (3) years or as when necessary as determined by the GSO to reflect changes in the Grid System and other Systems and to address any deficiency found.

OC7.4.3.7 Where necessary, the GSO can vary these procedures in real-time where, under System Stress conditions, the GSO in its reasonable opinion considers that such a change is required. Users are required to comply with instructions of the GSO, unless to do so would endanger life or would cause damage to Plant or Apparatus.

OC7.4.3.8 The GSO shall ensure that a systematic restoration process is conducted by energising each part of Power Island in such a way as to avoid load rejection by the CDGUs concerned. When energising a substation that has become de-energised, Isolation of certain outgoing feeders at that substation may be necessary to prevent excessive load pick-up on CDGUs connected to that Power Island or the Transmission System as the case may be, upon re-energisation. Where a Power Island has become de-energised, meaning that no CDGUs are operating to supply Consumer Demand, then the GSO will need to call on the service of Black Start Stations to re-establish voltage and frequency in that Power Island.

OC7.4.3.9 The following switching guidelines shall be used in preparation for restoration:

(1) the NLDC establishes its communication channels for the Power Island concerned;
(2) the NLDC sectionalises the Transmission System into pre-determined Power Islands;
(3) if possible, power should be made available at the auxiliary boards of the Generating Stations within four (4) hours of the system collapse to start CDGUs;

(4) during the restoration, steel mills have to be instructed not to operate their arc furnaces;
(5) a "Selective Open Strategy" is adopted for 275 kV or 132 kV "Active" Circuits at transmission substations;
(6) a "Feeding Strategy" is adopted for the Black Start Power Stations; and
(7) a "Cross Feeding Strategy" is adopted for utilising Black Start Power Stations to support the start up of other Power Stations in the same Power Island.

OC7.4.4 Demand Restoration

OC7.4.4.1 The re-energisation of transmission substations and Power Islands will involve the balancing of available generation Capacity to Grid System Demand. It is the responsibility of the NLDC to have details of each transmission substation Demand by transmission circuit, in order that the CDGU's concerned shall not be presented with load pickup in excess of the weakest CDGU's loading acceptance limit. If this is not followed, this can result in load-rejection by a CDGU.

OC7.4.4.2 Re-energisation procedures should address the following issues:
(1) CDGU maximum load pickup shall not be exceeded;
(2) long transmission lines should be energised with shunt reactors in circuit;
(3) Demand shall be predicted and also monitored in real time to determine when additional transmission circuits can be re-energised; and
(4) At least one Generating Unit in each Power Island to be operating in frequency sensitive mode.

OC7.4.4.3 Wherever practicable, "High Priority" Consumers such as Federal Government Administrative Centre shall have their Demand restored first.

OC7.4.4.4 Such a priority list, as contained in the “Grid System Restoration Plan” shall be prepared on the basis of Consumer categories and the Power Islands by the GSO for the approval of the Energy Commission.

OC7.4.4.5 During restoration of Demand, the Transmission System Frequency shall be monitored to maintain it above 49.5Hz as far as is possible.

OC7.4.5 Dealing with System Splits

OC7.4.5.1 Where the Transmission System becomes split, it is important that any Power Islands that exist are re-synchronised as soon as practicable to the main Transmission System, but where this is not possible, Consumers should be kept on-supply from the Power Islands to which they are connected.

OC7.4.5.2 Where CDGUs have shutdown and sections of the network are experiencing blackout conditions then the GSO will have to consider the available generating Capacity including any Operating Reserve and the prospective Demand that will be restored to ensure each Power Island operates within the Frequency limits given in the Licence Standard.

OC7.4.5.3 In the event of an extended duration system split the GSO shall apply a contingency plan which may include issuing of warnings, rota load disconnection and any other measures as necessary.

OC7.4.5.4 Where Power Islanding occurs under System Stress, then the NLDC should also have available rota load shedding programmes to avoid Customers being disconnected indiscriminately and being left without supplies for extended periods.

OC7.4.5.5 The GSO and Users shall agree on the communication channels to be used for the purpose of implementation of this OC7. These may be similar to the agreed channels identified pursuant to Operational Liaison OC5.

OC7.4.6 Grid System Restoration Plan Familiarisation Plan and Test

OC7.4.6.1 It shall be the responsibility of the User to ensure that any of its personnel who may reasonably be expected to be involved in Grid System restoration are familiar with, and are adequately trained and experienced in, their standing instructions and other obligations so as to be able to implement the procedures and comply with any procedures notified by the GSO.

OC7.4.6.2 The GSO shall be responsible for arranging for training and exercises of relevant parties and with Interconnected Parties, to ensure that all parties are aware of their roles in this OC7. Once these parties are familiar with the role assigned by the GSO then exercises can be

conducted, using simulators or other training methods as appropriate with the relevant parties covered by this OC7.

OC7.4.6.3 Users shall have the responsibility to ensure that their own staffs are familiar with their restoration procedures and coordination with the GSO and may seek the cooperation of the GSO in order to facilitate this requirement.

OC7.4.6.4 The GSO shall in consultation with each User on at least one occasion in three (3) years, carry out a Grid System Restoration Drill. The content of the drill shall be notified in advance to the relevant parties, and a date and time for execution of the drill shall be agreed. Users must cooperate with any such drill.

OC7.4.7 Recovery Procedures from Abnormal Operating Conditions

OC7.4.7.1 The GSO shall establish its Grid System Restoration Plan with due regard to the requirements associated with Abnormal Operational Conditions which may lead to issue of warnings related to imminent disruption of supply.

OC7.4.7.2 Following successful removal of such conditions through the implementation of the relevant parts of the Grid System Restoration Plan, the GSO shall withdraw the warning issued.

OC7.4.8 Loss of NLDC

OC7.4.8.1 In the rare event of the Primary Control Centre of NLDC being evacuated or subject to major disruption of its function, for whatever reasons, the GSO shall resume control of the Grid System from an Alternative Control Facility which will enable the GSO to ensure continuity of control functions until the Primary Control Centre of NLDC can be restored.

OC7.4.8.2 While the Alternative Control Facility is being established, the GSO shall handover the control of the Grid System to an Interim Control Centre which is sufficiently equipped to control the Grid System until the Alternative Control Facility is fully established.

OC7.4.8.3 The GSO shall also prepare all the necessary plans and procedures and from time to time conduct the necessary exercises to ensure that a

satisfactory change-over can be achieved without prejudicing the integrity of the Grid System.

OC7.4.9 Fuel Supply Emergency

OC7.4.9.1 The Single Buyer and GSO shall prepare fuel supply inventory advice for primary, alternative and standby fuels as applicable in accordance with obligations placed by the Government of Malaysia on the electricity industry at the time of the connection application in accordance with CC6.4.13. The Generators shall report the compliance of their fuel stock with the obligations in the relevant Agreements to the Single Buyer and GSO in accordance with the reporting requirements in the relevant Agreements.

OC7.4.9.2 The Single Buyer and GSO shall report the adequacy of the fuel supply inventory to the EC on an exception basis. In the event of any fuel supply shortages this reporting will be on a daily basis. Under these conditions the Single Buyer and the GSO shall abandon the Least Cost Generation Scheduling and revert to a Fuel Availability Based Scheduling conserving fuel supplies and taking all necessary measures to extend the endurance of the fuel supplies.

OC7.4.9.3 In the event the Single Buyer or GSO foresees an imminent or possible fuel shortage or curtailment of supplies the Single Buyer or GSO shall also instruct Generators to increase their fuel stock to the full extent of their capacity available at the Power Station to ensure continued endurance.

<End of the Operating Code No 7: Emergency Operations>

Operating Code No.8 (OC8): Safety Coordination

OC8.1 Introduction

OC8.1.1 Operating Code No.8 (OC8) specifies the standard procedures to be used by the GSO and Users for the co-ordination, establishment and maintenance of necessary Safety Precautions when work is to be carried out on the Grid System or a User System and when there is a need for Safety Precautions on HV Apparatus on the other User's System for this work to be carried out safely.

OC8.1.2 In this OC8 the term "work" includes testing, other than System Tests which are covered by OC11.

OC8.2 Objectives

OC8.2.1 The objectives of OC8 are to:

(1) establish the requirement on the GSO and Users (or their contractors) to carry out work on the Grid System or User System respectively in accordance with approved safety regulations; and

(2) ensure safe working conditions for personnel working on or in close proximity to Plant and Apparatus on the Grid System or personnel who may have to work at or use the equipment at the interface between the Grid System and a User System.

OC8.3 Scope

OC8.3.1 OC8 applies to the GSO and the following Users:

(1) Generators with CDGUs;

(2) All Generators with Generating Units not subject to Dispatch by the GSO, with total on-site generation capacity equal to or greater than 30 MW where the GSO considers it necessary;

(3) Network Operators;

(4) Grid Owner;

(5) Distributors

(6) Directly Connected Customers where the GSO considers it necessary;

(7) Interconnected Parties; and

(8) any other party or responsible person employed by a User and accepted by the GSO.

OC8.3.2 The work carried out will normally involve making Apparatus dead, securing associated Plant, including disabling and suitably securing any prime movers, isolating and Earthing that Plant and Apparatus such that it cannot be made live again from the Transmission System or subject to mechanical power and the establishing of a safe working area. It also includes the testing of Plant and Apparatus.

OC8.3.3 Work may also be carried out without making the Apparatus dead and this is termed as Live Apparatus Work usually performed on Transmission lines. For Live Apparatus Work safety precautions and coordination are also required and must be subject to permit to work procedures.

OC8.3.4 In the case where a User employs another party or a responsible person, the responsibility for safety and all other matters pursuant to this OC8 shall remain the responsibility of the User.

OC8.4 Procedures for Local Safety Instructions, Coordinators and Records of Safety Precautions

OC8.4.0 General

OC8.4.0.1 OC8 does not seek to impose a particular set of Safety Rules on the Grid Owner and other Users. The Safety Rules to be adopted and used by the Grid Owner and each User shall be those chosen by each party's management.

OC8.4.0.2 At all Grid Supply Points, the Safety Rules to be used by both the Grid Owner and the associated Users shall be as determined by the Grid Owner after consultation with the GSO. Competencies of the Grid Owner personnel and User's staff may be certified by the Grid Owner as allowed by the Energy Commission.

OC8.4.1 Defined Terms

OC8.4.1.1 Users should bear in mind that in OC8 only, in order that OC8 reads more easily with the terminology used in certain User's Safety Rules, the term "HV Apparatus" is defined more restrictively and is used accordingly in OC8. Users should, therefore, exercise caution in relation to this term when reading and using OC8.

OC8.4.1.2 In OC8 only the following terms shall have the following meanings:

(1) "HV Apparatus" means High Voltage electrical Apparatus forming part of a Network to which "Safety Precautions" must be applied to allow work to be carried out on that Network or a neighbouring Network.

(2) "Isolation" means the disconnection or separation of HV Apparatus from the remainder of the Network in accordance with the following:

(a) an Isolating device maintained in an isolating position. The isolating position must be either:

(i) maintained by immobilising and/or locking of the isolating device in the isolating position and affixing an "Isolation Notice" to it. Where the isolating device is locked with a "Safety Key", the Safety Key must be retained in safe custody; or

(ii) maintained and/or secured by electronic means provided that the entry of at least two (2) passwords are required before an action can be implemented; or

(iii) maintained and/or secured by such other method which must be in accordance with the "Local Safety Instructions" of the Network Controller or that User, as the case may be;

or:

(b) an adequate physical separation which must be in accordance with, and maintained by, the method set out in the Local Safety Instructions of the Network Controller or that User, as the case may be, and, if it is a part of that method, an Isolation Notice must be placed at the point of separation.

(3) "Earthing" means a way of providing a connection between HV conductors and earth by an Earthing device which is either:

(a) immobilised and locked in the Earthing positions. Where the Earthing device is locked with a Safety Key, the Safety Key must be secured and kept in safe custody; or

(b) maintained and/or secured in position by such other method which must be in accordance with the Local Safety Instructions of the Network Controller or that **User** as the case may be; or

(c) temporary Earthing immediately adjacent to the area or work.

(4) For the purpose of the coordination of safety under this OC8 relating to HV Apparatus, the term "Safety Precautions" means Isolation and/or Earthing.

(5) "Network Controller" means the network control centre that is responsible for that part of the Transmission Network or Distribution Network that the User has its Grid Supply Point on.

OC8.4.1.3 In OC8, references to any relevant Agreement shall be deemed to include references to the application or offer thereof.

OC8.4.2 Local Safety Instructions

OC8.4.2.1 Either party may require that the Isolation and/or Earthing provisions in the other party's Safety Rules to be made more stringent by the issue by that party of a Local Safety Instructions affecting the Grid Supply Point concerned. Provided that these requirements are not unreasonable in the view of the other party, then that other party will make such changes as soon as reasonably practicable. These changes may need to cover the application of Isolation and/or Earthing at a place remote from the Grid Supply Point, depending upon the Network layout. Approval may not be withheld because the party required to approve reasonably believes the provisions relating to Isolation and/or Earthing are too stringent.

OC8.4.2.2 If, following approval, a party wishes to change the provisions in its Local Safety Instructions relating to Isolation and/or Earthing, it must inform the other party. If the change is to make the provisions more stringent, then the other party merely has to note the changes. If the change is to make the provisions less stringent, then the other party needs to approve the new provisions, and the procedures referred to in this OC8.4.2 apply.

OC8.4.2.3 The procedures for the establishment of safety coordination by the GSO with an Interconnected Party are set out in the IOM applicable to each Interconnected Party.

OC8.4.3 Safety Coordinators

OC8.4.3.1 For each Grid Supply Point each User will at all times have a person nominated as “Safety Coordinator", to be responsible for the coordination of safety precautions when work is to be carried out on a Network, which necessitates the provision of Safety Precautions on HV Apparatus as required by this OC8. A Safety Coordinator may be responsible for the coordination of safety on HV Apparatus at more than one Grid Supply Point. The names of these Safety Coordinators will be notified in writing to the Network Controller by Users.

OC8.4.3.2 Each Safety Coordinator shall be authorised by the GSO on behalf of the Energy Commission in the case of the Grid Owner or by the Energy Commission in the case of a User, as the case may be, as competent to carry out the functions set out in this OC8 to achieve safety from the Grid System. Only persons with such authorisation will carry out the provisions of this OC8. Each safety coordinator for a User will be a company nominated Energy Commission competent person.

OC8.4.3.3 Contact between Safety Coordinators and the Network Controller will be made via normal operational channels and accordingly separate telephone numbers for Safety Coordinators shall be provided to the Network Controller. At the time of making contact, each User will confirm to the Network Controller that they are authorised to act as Safety Coordinator, pursuant to this OC8.

OC8.4.3.4 If work is to be carried out on a Network which necessitates the provision of Safety Precautions on HV Apparatus in accordance with the provisions of this OC8, the "Requesting Safety Coordinator" who requires the Safety Precautions to be provided will contact the Network Controller who will contact the relevant "Implementing Safety Coordinator" to co-ordinate the establishment of the Safety Precautions.

OC8.4.4 Record of Inter-System Safety Precautions (RISP)

OC8.4.4.1 This part sets out the procedures for utilising the "Record of Safety Precautions" ("RISP") between Users through the Network Controller.

OC8.4.4.2 The GSO will use the format of the RISP forms set out in Appendix 1 and Appendix 2 to this OC8. That set out in Appendix 1 and designated as "RISP-R", shall be used when the GSO is the Requesting Safety Coordinator, and that in Appendix 2 and designated as "RISP-I", shall be used when the GSO is the Implementing Safety Coordinator. Proforma of RISP-R and RISP-I will be provided for use by staff of the GSO.

OC8.4.4.3 Users shall adopt the format of the GSO RISP forms set out in Appendix 1 and Appendix 2 to this OC8.

OC8.4.5 Co-ordination of Work on Apparatus

OC8.4.5.1 Each Party (Requesting) shall notify the other Party (Implementing) by the middle of each month about work/test that it intends to carry out the following month which will require Isolation and Earthing at the other Party (Implementing)'s System.

OC8.4.5.2 On receipt of such notice, the Implementing Party shall reply within seven (7) days state whether such work and/or test can be carried out on the date requested. If not, alternate date shall be suggested.

OC8.4.5.3 By the end of each month, the GSO will have a programme of scheduled work that is to be carried out that requires the Isolation and/or Earthing of the Transmission System and User's Systems.

OC8.4.5.4 Should an emergency arise that requires work to be done on Apparatus that needs Isolation and/or Earthing to be done on the Transmission System and/or User's Systems, and for which the required notice under this OC8.4.5 cannot be given, then co-ordination can be done via telephone, fax or any other electronic means, but any request and agreement must be confirmed in writing before any work, Isolation or Earthing is carried out.

OC8.5 Safety Precautions for HV Apparatus

OC8.5.1 Agreement of Safety Precautions

OC8.5.1.1 The Requesting Safety Coordinator who requires Safety Precautions on User's Network or the Transmission System will contact the relevant Implementing Safety Coordinator giving details of the required work location and the requested Isolation point, and to agree the Safety Precautions to be established.

OC8.5.1.2 It is the responsibility of the Implementing Safety Coordinator to ensure that adequate Safety Precautions are established and maintained, on his and/or another System connected to his System, to enable safety from the system to be achieved on the HV Apparatus, specified by the Requesting Safety Coordinator.

OC8.5.1.3 When the Implementing Safety Coordinator is of the reasonable opinion that it is necessary for Safety Precautions on the System of the Requesting Safety Coordinator, other than on the HV Apparatus specified by the Requesting Safety Coordinator, which is to be identified in Part 1.1 of the RISP, he shall contact the Requesting Safety Coordinator and the details shall be recorded in part 1.1 of the RISP forms. In these circumstances it is the responsibility of the Requesting Safety Coordinator to establish and maintain such Safety Precautions.

OC8.5.2 In the Event of Disagreement

OC8.5.2.1 In any case where the Requesting Safety Coordinator and the Implementing Safety Coordinator are unable to agree the Location of the Isolation and (if requested) Earthing, then this shall be at the closest available points on the infeeds to the HV Apparatus on which safety from the Transmission System is to be achieved.

OC8.5.3 Implementation of Isolation

OC8.5.3.1 Following the agreement of the Safety Precautions in accordance with OC8.5.1 the Implementing Safety Coordinator shall then establish the agreed Isolation.

OC8.5.3.2 The Implementing Safety Coordinator shall confirm to the Requesting Safety Coordinator that the agreed Isolation has been established, and identify the Requesting Safety Coordinator's HV Apparatus up to the Grid Supply Point, for which the Isolation has been provided. The confirmation shall specify:

(1) for each Location, the identity (by means of HV Apparatus name, nomenclature and numbering or position, as applicable) of each point of Isolation;

(2) whether Isolation has been achieved by an Isolating Device in the isolating position or by an adequate physical separation;

(3) where an Isolating Device has been used whether the isolating position is either :

(a) maintained by immobilising and Locking the Isolating Device in the isolating position and affixing a Caution Notice to it. Where the Isolating Device has been Locked with a Safety Key that the Safety Key has been secured in a Key Safe and the Key Safe Key will be retained in safe custody; or

(b) maintained and/or secured by electronic means provided that the entry of at least two (2) passwords are required before an action can be implemented; or

(c) maintained and/or secured by such other method which must be in accordance with the Local Safety Instructions of the GSO or that User, as the case may be; and

(4) where an adequate physical separation has been used that it will be in accordance with, and maintained by, the method set out in the Local Safety Instructions of the GSO or that User, as the case may be, and, if it is a part of that method, that a Caution Notice has been placed at the point of separation.

OC8.5.3.3 The confirmation of Isolation shall be recorded in the respective Switching Operation Record of both the GSO and the User.

OC8.5.4 Implementation of Earthing

OC8.5.4.1 The Implementing Safety Coordinator shall then establish the agreed Earthing.

OC8.5.4.2 The Implementing Safety Coordinator shall confirm to the Requesting Safety Coordinator that the agreed Earthing has been established, and identify the Requesting Safety Coordinator's HV Apparatus up to the Grid Supply Point, for which the Earthing has been provided. The confirmation shall specify:

(1) for each Location, the identity (by means of HV Apparatus name, nomenclature and numbering or position, as is applicable) of each point of Earthing; and

(2) in respect of the Earthing Device used, whether it is:

(a) immobilised and Locked in the Earthing position. Where the Earthing Device has been Locked with a Safety Key, that the Safety Key has been secured in a Key Safe and the Key Safe Key will be retained in safe custody; or

(b) maintained and/or secured by electronic means provided that the entry of at least two (2) passwords are required before an action can be implemented; or

(c) maintained and/or secured in position by such other method which is in accordance with the Local Safety Instructions of GSO or that User, as the case may be.

The confirmation of Earthing shall be recorded in the respective in the respective Switching Operation Record of both the GSO and the User.

OC8.5.4.3 The Implementing Safety Coordinator shall ensure that the established Safety Precautions are maintained until requested to be removed by the relevant Requesting Safety Coordinator. This request shall follow the cancellation process specified in OC8.5.1.

OC8.5.5 Competencies and Training

OC8.5.5.1 It is the responsibility of the Grid Owner and each User individually to ensure that each member of their respective staffs that will be responsible for implementing any or all of the provisions of this OC8 is fully competent to do so and has been fully trained in all aspects of Safety Co-ordination. Such members of staff shall be authorised by the GSO on behalf of the Energy Commission in the case of the Grid Owner or by the Energy Commission in the case of a User, as the case

may be, as competent to carry out the functions set out in this OC8 to achieve safety from the Grid System.

OC8.6 Testing and Re-energisation

OC8.6.1 Testing

OC8.6.1.1 Before any Test can be carried out in part of the System that has been isolated and earthed, the Requesting Party should confirm from the Implementing Party that no person is working or testing or has been authorized to work or test on any part of the System within the points identified on RISP Form.

OC8.6.1.2 Earthing as stated in the RISP Form may be removed during the Test and for testing purposes only and must be agreed by both and properly recorded.

OC8.6.2 Re-energisation

OC8.6.2.1 On completion of the work and/or Test, the Requesting Party should contact the Implementing Party to cancel the RISP with the Identifying Number. The Implementing Party should read out Parts 1.1 and 1.2 of the said RISP. The Requesting Party should confirm that Parts 1.1 and 1.2 of his RISP are the same. Requesting Party should then cancel the form by signing Part 3 and the Implementing Party confirms the cancellation by signing Part 3.

OC8.6.2.2 Re-energisation shall be carried out in accordance with the following procedure:

(1) The switching sequence for normalization of the System should be carried as listed in the switching form.
(2) All switching done should be written down and repeated to the other Party who should then read back for confirmation.
(3) All switching done should be recorded in chronological order.

<End of the Operating Code No 8: Safety Coordination – Main Text>

Operating Code 8 - Appendix 1 – RISP - A

RECORD OF INTERCONNECTION SAFETY PRECAUTIONS (RISP- A)

RISP A No: A 15795 RISP B No:

(Requesting Safety Coordinator's Copy) (Implementing Safety Coordinators)

Part 1

1.1 H.V. APPARATUS IDENTIFICATION

1.2 I, ...……...(the Requesting Safety Coordinator) located at .....…… declare that I would like to carry out work on the following Apparatus:

.....……

……

1.3 Mr……..(the Implementing Safety Coordinator) has declared that he will carry out work on the following

Apparatus……..

……

1.4 SAFETY PRECAUTIONS ESTABLISHED BY THE REQUESTING SAFETY COORDINATOR :
State location, nomenclature, and number of each point of isolation and earthing to be implemented.

ISOLATION : ……
EARTHING : ……

1.5 SAFETY PRECAUTIONS REQUESTED BY THE REQUESTING SAFETY COORDINATOR ISOLATION :
State location, nomenclature, and number of each point of isolation requested.

ISOLATION : ……
EARTHING : ……

Signed: …… Date:……
Time:……
The Requesting Safety Coordinator.

Part 2

2.1 CONFIRMATION OF ISOLATION AND EARTHING BY REQUESTING SAFETY COORDINATOR AND IMPLEMENTING SAFETY COORDINATOR.

2.2 I, ……(the Requesting Safety Coordinator), located at ……
confirm to ……(the Implementing Safety Coordinator) located at ……that the SAFETY PRECAUTION as mentioned in Section 1.4 of this RISP **has been established.** The switches have been immobilised, locked and Notices have been affixed.

2.3 Mr.....(the Implementing Safety Coordinator), located at.....
has confirmed to me that the SAFETY PRECAUTIONS as mentioned in section 1.5 **has been established**.
The switches have been immoblised, locked, and Notices have been affixed.

No instructions will be issued at locations as specified in 1.4 and 1.5 for their removal until this RISP is cancelled under Part 3.

Signed: …… Date :……..…
Time:……
The Requesting Safety Coordinator.

Part 3

3.1 CANCELLATION
Cancellation of this RISP must only be done after both parties have confirmed completion of work as mentioned in Section 1.2 and 1.3.

3.2 I, …… (the Requesting Safety Coordinator), located at
……...

.declared that the work as mentioned in Section 1.2 is completed.

Signed : …….…Date : ……..
Time:……
The Requesting Safety Coordinator.

3.3 Mr. ……(the Implementing Safety Coordinator), located at ……, has confirmed that the work as mentioned as Section 1.3 is complete.

Signed : …….. Date : ……..
Time:……
The Requesting Safety Coordinator.

3.4 I, …… (the Requesting Safety Coordinator), located at ……
and
Mr. ……(the Implementing Safety Coordinator), located at …… agree that
This RISP is hereby cancelled.

Signed : …….. Date :
……..Time:……..
The Requesting Safety Coordinator.

Operating Code 8 - Appendix 2 – RISP - B

RECORD OF INTERCONNECTION SAFETY PRECAUTIONS (RISP –B)

RISP-B No: B 10895 **RISP A No:**

(Implementing Safety Coordinator's Copy) (Requesting Safety Coordinators)

Part 1

1.1 H.V. APPARATUS IDENTIFICATION

1.2 Mr, ...……...(the Requesting Safety Coordinator) located at .....…… declare that he would like to carry out work on the following Apparatus:

.....……

……

1.3 I, ……..(the Implementing Safety Coordinator) has declared that I will carry out work on the following

Apparatus……..

……

1.5 SAFETY PRECAUTIONS ESTABLISHED BY THE REQUESTING SAFETY COORDINATOR :
State location, nomenclature, and number of each point of isolation and earthing to be implemented.

ISOLATION : ……
EARTHING : ……

1.6 SAFETY PRECAUTIONS REQUESTED BY THE REQUESTING SAFETY COORDINATOR ISOLATION :
State location, nomenclature, and number of each point of isolation requested.

ISOLATION : ……
EARTHING : ……

Signed: …… Date:…… Time:……
The Implementing Safety Coordinator.

Part 2

2.1 CONFIRMATION OF ISOLATION AND EARTHING BY REQUESTING SAFETY COORDINATOR AND IMPLEMENTING SAFETY COORDINATOR.

2.2 Mr, ……(the Requesting Safety Coordinator), located at ……has confirmed to me ……(the Implementing Safety Coordinator) located at ……that the SAFETY PRECAUTION as mentioned in Section 1.4 of this RISP **has been established.** The switches have been immobilised, locked and Notices have been affixed.

2.3 I,.....(the Implementing Safety Coordinator), located at.....…have confirmed to Mr……(the Requesting Safety Coordinator), located at……that the SAFETY PRECAUTIONS as mentioned in section 1.5 **has been established**. The switches have been immoblised, locked, and Notices have been affixed.

No instructions will be issued at locations as specified in 1.4 and 1.5 for their removal until this RISP is cancelled under Part 3.

Signed: ……. Date :……..…
Time:……
The Implementing Safety Coordinator.

Part 3

3.1 CANCELLATION
Cancellation of this RISP must only be done after both parties have confirmed completion of work as mentioned in Section 1.2 and 1.3.

3.2 Mr,…… (the Requesting Safety Coordinator), located at ……...has

.comfirmed that the work as mentioned in Section 1.2 is completed.

Signed : …….…. Date : …….....
Time:…….
The Implementing Safety Coordinator.

3.3 I, ...(the Implementing Safety Coordinator), located at ....., has confirm that the
work as mentioned as Section 1.3 is complete.

Signed : …… Date : …….....
Time:…….
The Implementing Safety Coordinator.

3.4 Mr, ... (the Requesting Safety Coordinator), located at ..... and
I,. .....(the Implementing Safety Coordinator), located at ..... agree that This RISP is hereby cancelled.

Signed : …….. Date :
……...Time:……..…
The Implementing Safety Coordinator.

<End of the Operating Code No 8: Safety Coordination – Appendix 1>

Operating Code No.9 (OC9): Numbering and Nomenclature

OC9.1 Introduction

OC9.1.1 Numbering and nomenclature of Apparatus in the Grid System facilitates safe operation and control of the Grid System by the GSO. Operating Code No.9 (OC9) sets out the requirement for numbering and nomenclature of HV Apparatus located in Transmission System and User's Systems.

OC9.1.2 All Apparatus in the Grid System that are and will be under the control of the GSO shall have numbering and nomenclature in accordance with the system specified in this OC9 or as determined by the GSO.

OC9.1.3 The numbering and nomenclature of each item of HV Apparatus shall be included in the Single Line Diagram prepared for each Site of the Grid Owner or User Site. The numbering and names are also used in the labeling of equipment including, towers, apparatus, control panels and diagrams.

OC9.2 Objectives

OC9.2.1 The objectives of this OC9 are:

(1) to provide consistent numbering and nomenclature for apparatus in the Grid System;

(2) to ensure, so far as possible, the safe and effective operation of the Grid System and to reduce the risk of human error faults by requiring, that the numbering and nomenclature of User's HV Apparatus at Grid Supply Points shall be in accordance with the system used by the GSO as specified in this OC9.

OC9.3 Scope

OC9.3.1 OC9 applies to the GSO and the following Users:
(1) Generators;
(2) the Grid Owner;
(3) Distributors;
(4) Network Operators; and
(5) Directly Connected Customers.

OC9.4 Procedure

OC9.4.0 General

OC9.4.0.1 The term "User Site" means a site owned (or occupied pursuant to a lease, licence or other agreement) by a User in which there is a Grid Supply Point. For the avoidance of doubt, where a site is owned by the Grid Owner but occupied by other User, the site is a User Site.

OC9.4.0.2 The term "Site of the Grid Owner" means a site owned (or occupied pursuant to a lease, licence or other agreement) by the Grid Owner which there is a Grid Supply Point. For the avoidance of doubt, where a site is owned by a User but occupied by the Grid Owner, the site is Site of the Grid Owner.

OC9.4.1 HV Apparatus of the Grid Owner

OC9.4.1.1 HV Apparatus of the Grid Owner on the Grid Owner Sites shall have numbering and nomenclature in accordance with the system used by the GSO.

OC9.4.1.2 HV Apparatus of the Grid Owner on User's Sites shall have numbering and nomenclature in accordance with the system used by the GSO. For the Transmission System and at points of interface between the Transmission System and a User's system it is the responsibility of the GSO to determine the numbering and nomenclature convention which Users shall follow.

OC9.4.1.3 Due to system changes, although the naming and nomenclature convention will remain unchanged, the names and numbers of individual items of apparatus and equipment may change from time to time. Users and the GSO, as the case may be, should be aware of this

and take all reasonable measures to ensure that labels and Single Line Diagrams are maintained in accordance with the most recent names and numbers. If there is changes in system arrangements that affect names and numbering, naming and numbering of User's equipment shall be changed as required by the GSO.

OC9.4.1.4 The GSO may, in certain circumstances, provide temporary names and numbers for equipment and apparatus to Users. Where this is the case, the GSO shall declare the names and/or numbers as temporary. The relevant User will not install, or permit the installation of, any HV Apparatus on such User Site which has numbering and/or nomenclature which could be confused with HV Apparatus of the Grid Owner which is either already on that User Site or which the Grid Owner has notified that User will be installed on that User Site.

OC9.4.2 User HV Apparatus on Sites of the Grid Owner

OC9.4.2.1 User HV Apparatus on Sites of the Grid Owner shall have numbering and nomenclature in accordance with the system specified by the GSO.

OC9.4.2.2 When a User is to install its HV Apparatus on a Site of the Grid Owner, or it wishes to replace existing HV Apparatus on a Site of the Grid Owner and it wishes to adopt new numbering and nomenclature for such HV Apparatus, the User shall notify the GSO of the details of the HV Apparatus and the User shall request a proposed numbering and nomenclature to be adopted for that HV Apparatus from the GSO, at least eight (8) months prior to proposed installation.

OC9.4.2.3 The notification will be made in writing to the GSO and shall consist of a proposed Operation Diagram incorporating the proposed new HV Apparatus of the User to be installed.

OC9.4.2.4 The GSO will respond in writing to the User within two (2) months and provide details of the numbering and nomenclature which the User shall adopt for that HV Apparatus. The User shall then inform any other effected or related User, and shall adopt the numbering and nomenclature within six (6) months of the details being provided by the GSO.

OC9.4.3 Changes

OC9.4.3.1 Where the GSO in its reasonable opinion has decided that it needs to change the existing numbering or nomenclature of HV Apparatus of the Grid Owner on other User's Site or of User's HV Apparatus on a Site of the Grid Owner:

(a) the provisions of paragraph OC9.4.1 shall apply to such change of numbering or nomenclature of HV Apparatus of the Grid Owner with any necessary amendments to those provisions to reflect that only a change is being made; and

(b) in the case of a change in the numbering or nomenclature of User's HV Apparatus on a Site of the Grid Owner, the GSO will notify the User of the numbering and/or nomenclature the User shall adopt for that HV Apparatus (the notification to be in a form similar to that envisaged under OC9.4.1) at least eight (8) months prior to the change being needed and the User will respond in writing to the GSO within two (2) months of the receipt of the notification, confirming receipt. The User shall then inform any other effected or related User, and shall adopt the numbering and nomenclature within six (6) months of the details being provided by the GSO.

OC9.4.3.2 Users will be provided upon request with details of the current numbering and nomenclature system of the Grid in order to assist them in planning the numbering and nomenclature for their HV Apparatus on Sites of the Grid Owner.

OC9.4.3.3 When either the Grid Owner or other User installs HV Apparatus which is the subject of OC9, the Grid Owner or other User, as the case may be, shall be responsible for the provision and erection of clear and unambiguous labelling showing the numbering and nomenclature.

OC9.4.3.4 Where a User is required by OC9 to change the numbering and/or nomenclature of HV Apparatus which is the subject of OC9, the User will be responsible for the provision and erection of clear and unambiguous labelling by the required date.

OC9.4.3.5 Where the Grid Owner changes the numbering and/or nomenclature of its HV Apparatus which is the subject of OC9, the Grid Owner will be responsible for the provision and erection of clear and unambiguous labelling showing the numbering and nomenclature by the required date.

OC9.4.3.6 The GSO will not change its system of numbering and nomenclature in use other than to reflect new or newly adopted technology or HV Apparatus.

<End of the Operating Code No 9: Numbering and Nomenclature>

Operating Code No.10 (OC10): Testing and Monitoring

OC10.1 Introduction

OC10.1.1 Operating Code No. 10 (OC10) specifies the procedures to be followed by the GSO and the Single Buyer and the Users in coordinating and carrying out tests and monitoring to ensure compliance by Users covering all parts of the Connection Codes, Generating Unit Scheduling and Dispatch Parameters, Availability Declaration, as well as Supplementary Service Duties including response to frequency, reactive capability, fast start capability and Black Start capability.

OC10.1.2 The GSO and the Single Buyer are responsible for facilitating and coordinating the required testing and monitoring. The User is responsible for carrying out the test and or monitoring in accordance with the relevant Agreement and or specifications issued by the GSO and the Single Buyer.

OC10.1.3 Any User or the Single Buyer may propose any of the tests set out in this OC10 or any relevant Agreements to be carried out and such request shall be made to the GSO. The GSO shall consider such request and may approve and facilitate the test with due regard to the safety, security and integrity of the Grid System.

OC10.2 Objectives

OC10.2.1 The objectives of OC10 are:

(1) to enable the GSO and the Single Buyer to carry out, facilitate and coordinate testing and or monitoring the Transmission System or User's System at the Grid Supply Point to ensure compliance;
(2) to establish whether Users comply with the Connection Code;
(3) to establish whether CDGUs operate within their Generating Unit Scheduling and Dispatch parameters registered under SDC1 and other relevant Agreement;
(4) to establish whether a CDGU is available as declared; and
(5) to establish whether Generators can provide those Supplementary Services which they are either required or have agreed to provide under relevant Agreement.

OC10.3 Scope

OC10.3.1 OC10 applies to the GSO and the Single Buyer and the following Users:

(1) Generators;
(2) Network Operators;
(3) Grid Owner ;
(4) Distributors; and
(5) Directly Connected Customers

OC10.4 Procedure for Monitoring

OC10.4.1 The GSO will monitor the performance of:

(1) CDGUs against the parameters registered as Generation Scheduling and Dispatch Parameters under SDC1;
(2) compliance by Users with the CC; and
(3) the provision by Users of Supplementary Services and other parameters which they are required or have agreed to provide under the relevant Agreements.

OC10.4.2 If in the reasonable view of the GSO, a CDGU has failed to meet, in any material respect, the parameters registered as Generation Scheduling and Dispatch Parameters under SDC1 or a User has failed to comply with the CC, the GSO shall notify the relevant Generator or User and Single Buyer, giving details of the failure and the circumstances.

OC10.4.3 If in the reasonable view of the GSO, a Generator or User has failed to provide the Supplementary Services and other parameters required or has agreed to provide under relevant Agreement, the GSO shall notify the relevant CDGU or User and the Single Buyer, giving details of the failure and the circumstances.

OC10.4.4 The relevant Generator or User, as the case may be, will, as soon as possible, provide the GSO and the Single Buyer with an explanation of the reasons for the failure and, in the case of a Generator, details of the action that it proposes to take to enable the CDGU to meet those parameters and or the requirements to provide the Supplementary Services required or has agreed to provide, within a reasonable period, and in the case of a User details of the action it proposes to take to comply with the CC, within a reasonable period.

OC10.4.5 The GSO, the Single Buyer and the Generator or User, as the case may be, will then discuss the action that, in the case of a Generator, the Generator proposes to take and will endeavour to reach agreement as to the parameters which are to apply to the Dispatch Unit and the effective date(s) for the application of the agreed parameters and, in the case of a User, that the User proposes to take.

OC10.4.6 Unless otherwise provided in the relevant Agreements, in the event that agreement on the parameters cannot be reached within fourteen (14) days of notification of the non-compliance by the GSO to the Generator, the Single Buyer or the Generator shall be entitled to require a test, as set out in OC10.5, to be carried out.

OC10.5 Procedure for Testing

OC10.5.0 General

OC10.5.0.1 Except for Dispatch Accuracy Tests under OC10.5.5 and Availability Tests under OC10.5.6, the GSO will notify a Generator with CDGUs that it proposes to carry out any relevant tests at least two (2) Business Days prior to the time of the proposed test. The GSO will only make such a notification if the relevant Generator has declared the relevant CDGU available in an Availability declaration in accordance with SDC1 at the time at which the notification is issued. If the GSO makes such a notification, the relevant Generator shall then be obliged to make that CDGU available in respect of the time and for the duration that the test is instructed to be carried out, unless that CDGU would not then be available by reason of a planned outage approved prior to this instruction in accordance with OC2.

OC10.5.0.2 For tests which are required under relevant Agreements, the GSO and the Single Buyer will make notification to a Generator in accordance to procedures stated in the relevant Agreements.

OC10.5.0.3 Any testing to be carried out is subject to Transmission System conditions prevailing on the day.

OC10.5.1 Reactive Power Tests

OC10.5.1.1 Reactive Power tests are be conducted to demonstrate that the relevant CDGU meets the Reactive Power capability registered with

the GSO and the Single Buyer under the SDC which shall meet the requirements set out in the CC. Reactive Power tests shall be carried out at least once in every five (5) years or as and when required by the GSO and the Single Buyer

OC10.5.1.2 The procedure for carrying out Reactive Power tests will be specified by the GSO and the test details and the procedures shall be agreed between the GSO and the Single Buyer and the relevant Generator.

OC10.5.1.3 A Reactive Power test will be initiated by the issue of Dispatch instructions under SDC2. During the Reactive Power test, the voltage at the Grid Supply Point for the relevant CDGU will be maintained by the Generator at the voltage required by SDC2 through adjustment of Reactive Power on the remaining CDGUs, if necessary.

OC10.5.1.4 The Reactive Power performance of the GDGU will be recorded by a method to be determined by the GSO, and the GDGU will pass the test if it is within ±2.5 % of the capability registered under the PC which shall meet the requirements set out in CC (with due account being taken of any conditions on the Transmission System which may affect the results of the test). The relevant Generator must, if requested, demonstrate, to the reasonable satisfaction of the GSO and the Single Buyer, the reliability and accuracy of the equipment used in recording the performance.

OC10.5.2 Frequency Response Tests

OC10.5.2.1 Testing of frequency response performance will be carried out as part of the routine monitoring of CDGUs, to test compliance with Dispatch instructions for operation in Frequency Sensitive Mode under the SDC and in compliance with the PC and CC.

OC10.5.2.2 The procedure for carrying out Frequency Response Tests will be specified by the GSO and the Single Buyer and the test details and the procedures shall be agreed between the GSO and the Single Buyer and the relevant Generator.

OC10.5.2.3 The frequency response performance of the CDGU will be recorded by the GSO from voltage and current signals provided by the Generator for each CDGU. If monitoring at site is undertaken, the performance of the CDGU as well as Transmission System

Frequency and other parameters deemed necessary by the GSO will be recorded as appropriate and the CDGU will pass the test if:

(1) where monitoring of the Primary Response and or Secondary Response and or High Frequency Response to frequency change on the Transmission System has been carried out, the measured response in MW/Hz is within ± 2.5 % of the level of response specified in the parameters specified in the CC or in other relevant agreements for that CDGU;

(2) where measurements of the governor pilot oil/valve position have been requested, such measurements indicate that the governor parameters are within the criteria as determined by the GSO and the Single Buyer; and

(3) where monitoring of the High Frequency Response to frequency change on the Transmission System has been carried out, the measured response is within the requirements of the SDC for Frequency Sensitive Response; except for Gas Turbine Generating Units where the criteria set out in the CC shall apply.

OC10.5.2.4 The relevant Generator must, if requested, demonstrate to the GSO with reasonable satisfaction the reliability of any equipment used in the test.

OC10.5.4 Black Start Tests

OC10.5.4.1 Black Start Tests of each Black Start Station shall be carried out at least once every three (3) years. Where possible such tests should be arranged to coincide with the return to service of a Generating Unit following a major overhaul or a major scheduled maintenance programme.

OC10.5.4.2 The GSO may require a Generator with a Black Start Station to carry out a test ("Black Start Test") on a CDGU in a Black Start Station either while the Black Start Station remains connected to an external alternating current electrical supply ("Black Start Generating Unit Test"), or while the Black Start Station is disconnected from all external alternating current supplies ("Black Start Station Test") in order to demonstrate that a Black Start Station has a Black Start capability.

OC10.5.4.3 Where the GSO requires a Generator with a Black Start Station to carry out a Black Start Generating Unit Test, the GSO shall not require the Black Start Test to be carried out on more than one CDGU at that Black Start Station at the same time, and would not, in

the absence of exceptional circumstances, expect any of the other CDGUs at the Black Start Station to be directly affected by the Black Start Generating Unit Test.

OC10.5.4.4 All Black Start Tests shall be carried out at the time specified by the GSO and shall be undertaken in a manner approved by the GSO.

OC10.5.4.5 There are two types of Black Start Tests:
(1) Black Start Generating Unit Test;
(2) Black Start Station Test;

OC10.5.4.6 The procedure for carrying out Black Start Tests will be specified by the GSO and the test details and the procedures shall be agreed between the GSO and the relevant Generator.

OC10.5.4.7 Black Start Generating Unit Test - Where local conditions require variations in this procedure the Generator shall submit alternative proposals, in writing, for prior approval of the GSO. The following procedure shall, so far as practicable, be carried out in the following sequence for Black Start Generating Unit Tests:
(1) The relevant Black Start Generating Unit ("BSGU") shall be Synchronised and Loaded;
(2) All the auxiliary gas turbines and or auxiliary diesel engines and or auxiliary hydro generator in the Black Start Station in which that BSGU is situated, shall be shut down;
(3) The BSGU shall be de-Loaded and de-Synchronised and all alternating current electrical supplies to its auxiliaries shall be disconnected;
(4) The auxiliary gas turbine(s) or auxiliary diesel engine(s) to the relevant BSGU shall be started, and shall re-energise the unit board of the relevant BSGU;
(5) The auxiliaries of the relevant BSGU shall be fed by the auxiliary gas turbine(s) or auxiliary diesel engine(s) or auxiliary hydro-generator, via the BSGU's unit board, to enable the relevant BSGU to return to Synchronous Speed; and
(6) The relevant BSGU shall be Synchronised to the Transmission System but not Loaded, unless the appropriate instruction has been given by the GSO under SDC2.

OC10.5.4.8 Black Start Station Test - Where local conditions require variations in this procedure the Power Producer shall submit alternative proposals, in writing, for prior approval of GSO. The following

procedure shall, so far as practicable, be carried out in the following sequence for Black Start Station Tests:

(1) All Generating Units at the Black Start Station, other than the Generating Unit on which the Black Start Test is to be carried out and all the auxiliary gas turbines and or auxiliary diesel engines and or auxiliary hydro generators at the Black Start Station, shall be shut down;
(2) The relevant BSGU(s) shall be Synchronised and Loaded;
(3) The relevant BSGU(s) shall be de-Loaded and de-Synchronised;
(4) All external alternating current electrical supplies to the unit board of the relevant BSGU(s) and to the station board of the relevant Black Start Station shall be disconnected;
(5) An auxiliary gas turbine or auxiliary diesel engine or auxiliary hydro generator at the Black Start Station shall be started, and shall re-energise either directly, or via the station board, the unit board of the relevant BSGU(s); and
(6) The provisions of items (5) and (6) in the Black Start Generating Unit Test above shall thereafter be followed.

OC10.5.5 Dispatch Accuracy Tests

OC10.5.5.1 The GSO on its own may at any time issue an instruction requiring a Generator to carry out a test, at a time no sooner than thirty (30) minutes from the time that the instruction was issued, on any one or more of the Generator's CDGUs to demonstrate that the relevant CDGU meets the relevant Generation Scheduling and Dispatch Parameters which have been monitored under OC10.4. The GSO shall also facilitate such tests when required by the Single Buyer. It may not do so more than once in any calendar month in respect of any particular Dispatch Unit except to the extent that it can on reasonable grounds justify the necessity for further tests or unless the further test is a re-test.

OC10.5.5.2 The instruction referred to in the above section may only be issued if the relevant Generator has submitted an Availability Declaration relating to that CDGU in respect of the Schedule Day current at the time at which the instruction is issued, in which event the relevant Generator shall then be obliged to submit an Availability Declaration for that CDGU in respect of the time and the duration that the test is instructed to be carried out, unless that CDGU would not then be available by reason of forced outage or Planned Outage expected prior to this instruction.

OC10.5.5.3 The test will be initiated by the issue of Dispatch instructions under SDC2 in accordance with the Generation Scheduling and Dispatch Parameters which had been declared for the day on which the test was called.

OC10.5.5.4 The performance of the CDGU will be recorded on a chart recorder, or other recording device that provides a permanent record, (with measurements taken on the LV side of the generator transformer) in the relevant Generator's Control Room, in the presence of a reasonable number of representatives appointed and authorised by the GSO, and the CDGU will pass the test if the Generation Scheduling and Dispatch Parameter(s) under test are within 1.0% of the declared value being tested unless the following Generation Scheduling and Dispatch Parameters are being tested, in which case the CDGU will pass the test if:

(1) in the case of achieving Synchronisation, Synchronisation is achieved within ± 5 minutes of the time it should have achieved Synchronisation;

(2) in the case of Synchronising Generation (as registered as a Generation Scheduling and Dispatch Parameter), the Synchronising Generation achieved is within an error level equivalent to 1.0% of Registered Capacity;

(3) in the case of meeting run-up rates, the CDGU achieves the instructed output and, where applicable, the first and/or second intermediate breakpoints, each within ±3 minutes of the time it should have reached such output and breakpoints from Synchronisation (or break point, as the case may be), calculated from its registered run-up rates;

(4) in the case of meeting de-Loading rates, if the CDGU achieves de-Loading within ±5 minutes of the time, calculated from registered de-Loading rates, that it should have achieved de-Loading; and

(5) in the case of all other generation Scheduling and Dispatch Parameters not contained in (1) to (4) above, the test results are within 1.0 % of the declared value being tested.

OC10.5.5.5 Due account will be taken of any conditions on the Transmission System which may affect the results of the test. The relevant Generator must, if requested, demonstrate, to the GSO reasonable satisfaction, the reliability and accuracy of the equipment used during the tests.

OC10.5.6 Availability Tests

OC10.5.6.1 The GSO may at any time and by giving prior notice of at least thirty (30) minutes, carry out or facilitate a test on the Availability of a CDGU (an "Availability Test"), by Scheduling and Dispatching that CDGU in accordance with the requirements of the relevant provisions of any relevant Agreement or based on instructions from the GSO.

OC10.5.6.2 Accordingly, the CDGU will be Scheduled and Dispatched even though it may not otherwise have been Scheduled and Dispatched on the basis of the relevant Least Cost Generation Scheduling or Transmission System Constraints, in the absence of the requirement for the Availability Test. The Generator whose CDGU is the subject of the Availability Test will comply with the instructions properly given by the GSO relating to the Availability Test.

OC10.5.6.3 The GSO shall notify the relevant CDGU and the Single Buyer the result of the Availability Test.

OC10.5.6.4 The GSO shall facilitate such test when required by the Single Buyer.

OC10.5.7 Other Compliance Tests and Monitoring

OC10.5.7.1 PSS settings and Damping are part of technical requirements imposed on Generators and the Grid Owner. The GSO and the Grid Owner has the responsibility to study and determine the necessary settings. Users are obliged to set and test such controllers in accordance with the settings provided by the GSO and the Grid Owner, and also to ensure that they are functioning correctly.

OC10.5.7.2 Testing of PSS controllers, AGC set point instruction compliance and other control devices will be carried out as part of the routine monitoring of CDGUs, to test compliance with Dispatch instructions and operation according to Grid System performance requirements under the SDC and in compliance with the PC and CC.

OC10.5.7.3 The procedure for carrying out such tests, and other tests that may be specified in relevant Agreement, will be specified by the Single

Buyer and GSO and the test details and the procedures shall be agreed between the GSO and the relevant parties.

OC10.5.7.4 Users including the Grid Owner shall install appropriate monitoring equipment to monitor plant performance as specified by the GSO, and provide output data from such equipment to the GSO.

OC10.5.8 Test Reporting Requirements

OC10.5.8.1 Subject to passing a test, a Preliminary Report of a Compliance Test shall be submitted by the User within seventy-two (72) hours after the completion of the test and a Final Report within sixty (60) days by the User unless different periods have been agreed between the GSO, Single Buyer and the User.

OC10.5.8.2 The Final Report shall include a description of the Plant and/or Apparatus tested, the date of the test and a description of the System Test carried out, together with the results, conclusions and recommendations.

OC10.5.8.3 The GSO and/or the Single Buyer, as the case may be, shall confirm acceptance of the final report as a true and accurate record of the test within seven (7) days of receipt of the final report.

OC10.6 Failure of Tests

OC10.6.1 If the CDGU concerned fails to pass any test, the GSO shall immediately take into account the non-compliance and or limitations of the particular CDGU in the Least Cost Generation Scheduling and or the operation of the Grid System to ensure secure system. The GSO shall then write a report within five (5) Business Days of the test to the concerned Generator, the Single Buyer and the Energy Commission where necessary, providing details of the non-compliance and or limitations including the implications of the non-compliance and or the limitations on the Least Cost Generation Scheduling and the operation of the Grid System.

OC10.6.2 The Generator concerned must provide the GSO and the Single Buyer with a written report specifying in reasonable detail the reasons for any failure of the test so far as the Generator knows after due and careful enquiry. This must be provided within three (3) Business Days of the test.

OC10.6.3 The provisions of the relevant Agreements shall apply for failure of tests thereunder.

OC10.6.4 In cases for which there are no provisions in the relevant Agreements and if a dispute arises relating to the failure, the GSO and the relevant parties shall seek to resolve the dispute by discussion, and, if they fail to reach Agreement, the affected parties may by notice require the GSO to carry out a re-test after two (2) Business Days notice which shall be carried out following the procedure set out in the relevant section of OC10.5.

OC10.6.5 If the CDGU concerned fails to pass the re-test and a dispute arises from that re-test, either party may use the relevant Agreement dispute resolution procedure. If there is no such provision in the relevant Agreement, then the Grid Code dispute resolution procedure, contained in the General Conditions (GC), for a ruling in relation to the dispute, shall be applied.

OC10.6.6 If it is accepted that the CDGU has failed the test or re-test (as applicable), the Generator shall within fourteen (14) Business Day or as per the relevant Agreements as the case may be, submit in writing to the GSO and Single Buyer for the approval of the date and time which the Generator shall have brought the CDGU concerned to a condition where it complies with the relevant requirements set out in the PC, CC or SDC and would pass the test. The GSO will not unreasonably withhold or delay its approval of the Generator's proposed date and time submitted. The Generator shall then be subjected to the relevant test procedures outlined in OC10.5.

OC10.6.7 For the purpose of monitoring Dispatch error, the GSO will use a method which incorporates up to one hundred (100) sampling points, which are, so far as possible, equally spaced, per thirty (30) minutes.

<End of the Operating Code No 10: Testing and Monitoring>

Operating Code No.11 (OC11): System Tests

OC11.1 Introduction

OC11.1.1 System Tests are those tests which involve either a simulated or a controlled application of irregular, unusual or extreme conditions on the Grid System or User Systems. In addition, they could include certain commissioning and or acceptance tests on Plant and Apparatus to be carried out by the Users which may have a significant impact upon the Grid System, other User Systems or the wider System.

OC11.1.2 To minimise disruption to the operation of the Grid System and to other User Systems, it is necessary that these tests be subjected to central coordination and control by the GSO.

OC11.1.3 Testing of a minor nature carried out on isolated Systems or those facilitated by the GSO and carried out by Users to assess performance and or compliance of Users with their design, operating and connection requirements as specified in this Grid Code and in their relevant Agreements are covered by OC10 on Test and Monitoring.

OC11.2 Objectives

OC11.2.1 The objectives of OC11 are to:

(1) ensure that the procedures for arranging, facilitating and carrying out System Tests do not, so far as is practicable, threaten the safety of personnel or members of the public and minimise the possibility of damage to Plant and or Apparatus and/or the security of the Grid System;

(2) set out procedures preparing and carrying outs System Tests; and

(3) set out procedures for reporting of System Tests.

OC11.3 Scope

OC11.3.1 OC11 applies to the GSO and the following Users:

(1) All Generators with CDGUs;

(2) All Generators with Generating Units not subject to Dispatch by the GSO, with total on-site generation capacity not less than 30MW where the GSO considers it necessary;

(3) Grid Owner;

(4) Distributors;

(5) Directly Connected Customers where GSO considers it necessary; and

(6) Interconnected Parties

OC11.4 Procedure for Arranging System Tests

OC11.4.0 General

OC11.4.0.1 System Tests which in the reasonable opinion of the GSO are expected to have a "minimal effect" upon the Grid System and/or User Systems will not be subject to this procedure. "Minimal effect" means that any distortion to voltage and Frequency at Grid Supply Points does not exceed the License Standards and that the security of the Grid System is not compromised.

OC11.4.0.2 Where a System Test is proposed by a User and considered by that User to have a "minimal effect" upon the Grid System and/or the User System, it is the responsibility of that User to determine that this is the case and if in doubt, to consult the GSO.

OC11.4.0.3 Where the System Test is proposed by the GSO, it is the responsibility of the GSO to determine whether or not the System Test will have “minimal effect” upon the Grid System and User’s Systems.

OC11.4.1 Test Proposal Notice

OC11.4.1.1 The level of Demand on the Grid System varies substantially according to the time of day and less so according to the time of year. Consequently, certain System Tests which may have a significant impact on the Grid System (for example, tests of the full load capability of a Generating Unit over a period of several hours) can

only be undertaken at certain times of the day and year. Other System Tests, for example, those involving substantial MVAr generation or valve tests, may also be subject to timing constraints. It therefore follows that notice of System Tests should be given as far in advance of the date on which they are proposed to be carried out as reasonably practicable, and in any case not less than twelve (12) months prior to the proposed date of the System Tests.

OC11.4.1.2 In certain cases a System Test may be needed on giving less than twelve (12) months notice. In that case, after consultation with the Test Proposer and User(s) identified by the GSO under OC11.3.1, the GSO shall draw up a timetable for the proposed System Test and the procedure set out in OC11.4.2 to OC11.4.5 shall be followed in accordance with that timetable.

OC11.4.1.3 When the Grid Owner or any other User intends to undertake a System Test, a "Test Proposal Notice" shall be given by the "Test Proposer" to the GSO and to all parties who may be affected by such a test. The proposed Test Proposal Notice shall be in writing and include details of the nature and purpose of the test and will indicate the extent and situation of the Plant and Apparatus involved. The proposal shall also include the detailed test procedures.

OC11.4.1.4 If the GSO is of the view that the information set out in the Test Proposal Notice is insufficient, it will contact the Test Proposer as soon as reasonably practicable, with a written request for further information. The GSO will not be required to do anything under this OC11 until it is satisfied with the details supplied in the Test Proposal Notice or pursuant to a request for further information.

OC11.4.1.5 Each User including the Grid Owner must submit a Test Proposal Notice if it proposes to carry out any of the following System Tests, each of which is therefore considered to be a System Test:

(1) Generating Unit full load capability tests including load acceptance tests and re-commissioning tests;
(2) Var limiter tests;
(3) Main steam valve tests;
(4) Load rejection tests;
(5) On-load protection testing;
(6) Directional tests
(7) Primary Response and Secondary Response performance tests;
(8) Short-circuit generator terminal test;
(9) Special Protection Scheme tests.

OC11.4.1.6 If the GSO wishes to undertake a System Test, the GSO shall be deemed to have written a proposal of that test through procedures internal to the GSO. Examples of System Tests that the GSO may carry out are:

(1) Load rejection tests;
(2) Directional tests;
(3) Special Protection Scheme tests; and
(4) Test involving changes in Transmission System impedances;

OC11.4.1.7 The GSO shall have overall co-ordination of any System Test, using the information provided to it under this OC11.4.1 and shall identify in its reasonable estimations, which Users other than the Test Proposer or which other Users not already identified by the Test Proposer, may be affected by the System Test.

OC11.4.2 Test Committee

OC11.4.2.1 Following receipt of the Test Proposal Notice, the GSO shall evaluate and discuss the proposal with the Users identified as being affected. Within thirty (30) calendar days of receipt of the Test Proposal and subject to delays arising from any additional information request, the GSO shall form a "Test Committee" which shall be headed by a suitably qualified person referred to as the "Test Coordinator" appointed by the GSO.

OC11.4.2.2 The Test Committee may also comprise of a suitable representative from each affected User and other experts deemed necessary by the Test Coordinator.

OC11.4.2.3 A meeting of the Test Committee will take place as soon as possible after the GSO has notified all Users identified by it under OC11.3.1 and the Test Proposer of the composition of the Test Committee, and in any event within one (1) month of the appointment of the Test Committee.

OC11.4.2.4 The Test Committee shall consider:

(1) the details of the nature and purpose of the proposed System Test and other matters set out in the Test Proposal Notice (together with any further information requested by the GSO under OC11.4.1);
(2) the economic, operational and risk implications of the proposed System Test;

(3) the possibility of combining the proposed System Test with any other tests and with Plant and/or Apparatus outages which arise pursuant to the Operational Planning requirements of the GSO and Users; and
(4) implications of the proposed System Test on the Scheduling and Dispatch of Generating Plant, in so far as it is able to do so.

OC11.4.2.5 Users identified by the GSO under OC11.3.1, the Test Proposer and the GSO shall be obliged to supply to that Test Committee, upon written request, with such details as the Test Committee reasonably requires in order to consider the proposed System Test.

OC11.4.2.6 The Test Committee shall be convened by the Test Coordinator as often as he deems necessary to conduct its business.

OC11.4.3 Pre-Test Report

OC11.4.3.1 Within thirty (30) calendar days of forming the Test Committee, the Test Coordinator shall submit upon the approval of the GSO, a report ("Pre-test Report") which shall contain the following:
(1) proposals for carrying out the System Test including the manner in which it is to be monitored. These may be similar to those test procedures submitted by the Test Proposer if deemed appropriate and safe by the Test Committee;
(2) other matters deemed appropriate by the Test Committee.

OC11.4.4 Pre-System Test Arrangements

OC11.4.4.1 If the System Test is agreed to be carried out, the proposed System Test can proceed and at least one (1) month prior to the date of the proposed System Test, the Test Committee will submit to the GSO, the Test Proposer and each User identified by the GSO under OC11.3.1, a programme (the "Test Programme") stating the switching sequence and proposed timings of the switching sequence, a list of those staff involved in carrying out the System Test (including those responsible for site safety) and such other matters as the Test Committee deems appropriate.

OC11.4.4.2 The Test Programme will bind all recipients to act in accordance with the provisions of the Test Programme in relation to the proposed System Test subject to the following paragraph.

OC11.4.4.3 Any problems with the proposed System Test which arise or are anticipated after the issue of the Test Programme and prior to the day of the proposed System Test, must be notified to the Test Coordinator as soon as possible in writing. If the Test Coordinator decides that these anticipated problems merit an amendment to, or postponement of, the System Test, he shall notify the Test Proposer (if the Test Coordinator was not appointed by the Test Proposer), the GSO and each User identified by the GSO under OC11.3.1 accordingly.

OC11.4.4.4 If on the day of the proposed System Test, operating conditions on the Total System are such that any party involved in the proposed System Test wishes to delay or cancel the start or continuance of the System Test, they shall immediately inform the Test Coordinator of this decision and the reasons for it. The Test Coordinator shall then postpone or cancel, as the case may be, the System Test and shall, if possible, agree with the Test Proposer (if the Test Coordinator was not appointed by the Test Proposer), the GSO and all Users identified by the GSO under OC11.3.1 another suitable time and date. If he cannot reach such Agreement, the Test Coordinator shall reconvene the Test Committee as soon as practicable, which will endeavour to arrange another suitable time and date for the System Test, in which case the relevant provisions of OC11 shall apply.

OC11.4.5 Post-System Test Report

OC11.4.5.1 At the conclusion of the System Test, the Test Proposer shall be responsible for preparing a written report on the System Test (the "Final Report") for submission to the GSO and other members of the Test Committee. The Preliminary Report of the System Test shall be submitted within seventy two (72) hours after the completion of the test and Final Report within sixty (60) days unless different periods have been agreed by the Test Committee prior to the System Test taking place.

OC11.4.5.2 The Final Report shall not be submitted to any person who is not a member of the Test Committee unless the Test Committee, having considered carefully the confidentiality issues arising.

OC11.4.5.3 The Final Report shall include a description of the Plant and/or Apparatus tested, the date of the test and a description of the System

Test carried out, together with the results, conclusions and recommendations.

<End of the Operating Code No 11: System Tests>

Part VII: Scheduling and Dispatch Codes

SDC1.0 These Scheduling and Dispatch Codes comprise:

(1) Scheduling and Dispatch Code SDC1 – Generation Scheduling
(2) Scheduling and Dispatch Code SDC2 – Control, Scheduling and Dispatch
(3) Scheduling and Dispatch Code SDC3 – Frequency and Interconnector Transfer Control

SDC1: Generation Scheduling

SDC1.1 Introduction

SDC1.1.1 Scheduling the operations of Generating Units is a major component of operations plans. Scheduling of the Generating Units depends upon the pattern of demand by the system, the Least Cost operation of Grid System, the availability, parameters and costs of Generating Units, the flexibility of operation of Generating Units, constraints on the Transmission System, security requirements, and System losses.

SDC1.1.2 Scheduling and Dispatch Code No.1 (SDC1) sets out the procedure for:

(1) The daily notification by the Generators of the Availability of any of their CDGU in an Availability Declaration;
(2) the daily notification of whether there is any CDGU which differs from the last Generating Unit Scheduling and Dispatch Parameters (SDP), in respect of the following Schedule Day by each Generator in a SDP Notice;
(3) The monthly, weekly and daily notification of Power export availability or import requests and price information by Interconnected Parties to the GSO and Single Buyer;
(4) the submission of certain Network data by each User with a Network directly connected to the Transmission System to which Generating Units are connected (to allow consideration of Network constraints);
(5) the submission of certain Network data by Users with a Network directly connected to the Distribution Network to which Generating Units are connected (to allow consideration of distribution restrictions);
(6) the submission by Users of Demand Control information (in accordance with OC4);
(7) Agreement on Power and Energy flows between Interconnected Parties by the Single Buyer following discussions with the GSO; and
(8) the production of a Least Cost Generation Schedule which schedule, for the avoidance of doubt, in this SDC1 means unit commitment and generation Dispatch level.

SDC1.2 Objectives

SDC1.2.1 The objectives of SDC1 are to enable the Single Buyer to prepare a schedule based on a Least Cost Dispatch model (or models) which, amongst other things, models variable costs, price data, fuel price data, heat rate data, gas volume and pressure constraints, other fuel constraints, reservoir lake level, and repairian requirement, and allows hydro/thermal optimisation and is used in the Scheduling and Dispatch process and thereby:

(1) ensures the integrity of the interconnected Transmission System;
(2) ensures the security of supply;
(3) ensures that there is sufficient available generating Capacity to meet Transmission System Demand as often as is practicable with an appropriate margin of reserve;
(4) enables the preparation and issue of a Generation Schedule;
(5) enables optimisation of the total cost of Grid System operation over a specific period taking into account scheduled and forced outages, and factors (6), (7), and (8) of this SDC1.2;
(6) enables optimisation of the use of generating and transmission capacities;
(7) enables use of Energy from hydro-power stations to optimise system marginal costs taking due account of reservoir levels, repairian requirements and seasonal variations, which are based upon long term water inflow records; and
(8) maintains sufficient solid and liquid fuel stocks, optimises hydro reservoir depletion and to meet fuel-contract requirement.

In cases where fuel prices are subsidized, the price to be used for scheduling shall be the price decided by the government.

SDC1.3 Scope

SDC1.3.1 SDC1 applies to the GSO and Single Buyer, and to the following Users:

(1) Generators with a CDGU;
(2) Grid Owner;
(3) Interconnected Parties;
(4) Distributors;
(5) Network Operators; and
(6) Directly Connected Customers who can provide Demand Reduction in real time

SDC1.4 Procedure

SDC1.4.1 Applicability

SDC1.4.1.1 Schedules and other information supplied by the Single Buyer to the User, or Declarations and other information supplied by the User to the the Single Buyer, as the case may be, under this SDC1 shall be supplied on the current Working Day for the following Working Day.

SDC1.4.1.2 Where the day following the current Working Day is a Non-Working Day, Schedules and other information supplied by the Single Buyer to the User, or Declarations and other information supplied by the User to the Single Buyer, as the case may be, under this SDC1 shall be supplied on the current Working Day for each of the two (2) days following the current Working Day.

SDC1.4.1.3 Where the are several consecutive days following the current Working Day which are Non-Working Days, Schedules and other information supplied by the Single Buyer to the User, or Declarations and other information supplied by the User to the Single Buyer, as the case may be, under this SDC1 shall be supplied on the current Working Day for each of the consecutive Non-Working Days and for the day following the period of consecutive Non-Working days, except as required under SDC1.4.1.4.

SDC1.4.1.4 Where there are more than four (4) consecutive Non-Working Days following the current Working Day, Schedules and other information supplied by the Single Buyer to the User, or Declarations and other information supplied by the User to the Single Buyer, as the case may be, under this SDC1 shall be supplied on the current Working Day for each of the next four (4) consecutive Non-Working Days and for the day following the period of four (4) consecutive Non-Working days.

SDC1.4.1.5 If SDC1.4.1.4 applies, Schedules and other information supplied by the Single Buyer to the User, or Declarations and other information supplied by the User to the Single Buyer, as the case may be, under this SDC1 shall be supplied on the day immediately following the period of four (4) consecutive Non-Working days, whether or not it is a Working Day, for the following day.

SDC1.4.1.6 For the purposes of this SDC1.4.1, a Non-Working Day shall mean a Saturday, Sunday or public holiday.

SDC1.4.2 Generator Availability Declaration

SDC1.4.2.1 By 1000 hours each Working Day each Generator shall in respect of each of its CDGUs submit to the Single Buyer in writing (or by such electronic data transmission facilities as have been agreed with the Single Buyer) an Availability Declaration stating whether or not such CDGU is proposed by that Generator to be available for generation in respect of the next following period (following day or days) from 0000 hours to 2400 hours for each day. If it is to be so available it must state the Declared Availability expressed in a whole number of MW, in respect of any time period during the following day or days (specifying the time at which each time period begins and finishes), and the other data listed under the Availability Declaration heading in Appendix 1. Such Availability Declaration will replace any previous Availability Declaration covering any part of the next following Availability Declaration period. In so far as not revised, the previously submitted Availability Declaration shall apply for the next following Availability Declaration period.

SDC1.4.2.2 Data requirements include, in the case of CD CCGT Modules, the CD CCGT Module Matrix (which shows the combination of CCGT Units running in relation to any given MW output, in the form of the diagram illustrated in Appendix A1). The CD CCGT Module Matrix is designed to achieve certainty in knowing the number of CCGT Units synchronised to achieve a Dispatch instruction.

SDC1.4.2.3 The other data may also include in the case of a Range CCGT Module, a request for the Grid Entry Point at which the power is provided from the Range CCGT Module to be changed with effect from the beginning of the following Schedule Day to another specified single Grid Entry Point (there can be only one) to that being used for the current Schedule Day. The Single Buyer will respond to this request at the same time that it issues the Generation Schedule. If the Single Buyer agrees to the request (such Agreement not to be unreasonably withheld), the Generator will operate the Range CCGT Module in accordance with the request. If the Single Buyer does not agree, the Generator will, if it produces

power from that Range CCGT Module, continue to provide power from the Range CCGT Module to the Grid Entry Point being used at the time of the request. The request can only be made up to 1000 hours in respect of the following Schedule Day. No subsequent request to change can be made after 1000 hours in respect of the following Schedule Day.

SDC1.4.2.4 The principles set out in PCA.3.2.4 apply to the submission of a CD CCGT Module Matrix and accordingly the CD CCGT Module Matrix can only be amended as follows:-

(1) Normal CCGT Module
if the CCGT Module is a Normal CCGT Module, the CCGT Units within that CCGT Module can only be amended such that the CCGT Module comprises different CCGT Units if the Single Buyer gives its prior consent in writing and is also consistent with the relevant Agreement. Notice of the wish to amend the CCGT Units within such a CCGT Module must be given at least six (6) months before it is wished for the amendment to take effect;

(2) Range CCGT Module
if the CCGT Module is a Range CCGT Module, the CCGT Units within that CCGT Module can only be amended such that the CCGT Module comprises different CCGT Units for a particular Schedule Day if the relevant notification is given by 1000 hours on the day prior to the Schedule Day in which the amendment is to take effect. No subsequent amendment may be made to the CCGT Units comprising the CCGT Module in respect of that particular Schedule Day.

SDC1.4.2.5 In the absence of the submission of a CD CCGT Module Matrix the last correctly submitted CD CCGT Module Matrix shall be taken to be the CD CCGT Module Matrix'.

SDC1.4.2.6 In the case of a CD CCGT Module Matrix submitted (or deemed to be submitted) as part of the other data for CD CCGT Modules, the output of the CD CCGT Module at any given instructed MW output must reflect the details given in the CD CCGT Module Matrix. It is accepted that in cases of change in MW in response to Dispatch instructions issued by the GSO there may be a transitional variance to the conditions reflected in the CD CCGT Module Matrix. In achieving a Dispatch instruction the range of number of CCGT Units envisaged in moving from one MW output level to the

other must not be departed from. Each Generator shall notify the GSO as soon as practicable after the event of any such variance.

SDC1.4.2.7 Subject as provided above, the GSO will rely on the CCGT Units specified in such Matrix running as indicated in the CD CCGT Module Matrix when it issues a Dispatch instruction in respect of the CD CCGT Module.

SDC1.4.2.8 Any changes to the CD CCGT Module Matrix must be notified immediately to the Single Buyer in accordance with the provisions of SDC1 and relevant Agreement. Such Availability Declaration will replace any previous Availability Declaration covering any part of the next following Availability Declaration Period.

SDC1.4.2.9 A revised Availability Declaration may be made in respect of any CDGU which, since the time at which the Availability Declaration relating to that CDGU, or any previous revised Availability Declaration under this section, was prepared, has either:

(1) become available at a different wattage to that which such CDGU was proposed to be made available for generation in any such Availability Declaration whether higher or lower (including zero); or

(2) (in the case of a CDGU declared to be not available for generation in an Availability Declaration) become available for generation.

SDC1.4.2.10 The revisions to the other data are listed under the Availability Declaration heading in Appendix 1.

SDC1.4.2.11 A revised Availability Declaration submitted by a Generator under this paragraph shall state, in respect of any CDGU whose availability for generation is revised, the time periods (specifying the time at which each time period begins and finishes) in the relevant Availability Declaration period in which such CDGU is proposed to be available for generation and, if such CDGU is available, at what wattage, expressed in a whole number of MW, in respect of each such time period.

SDC1.4.3 Generation Scheduling and Dispatch Parameters

SDC1.4.3.1 By 1000 hours each day each Generator shall in respect of each CDGUs which the Generator shall have declared available under SDC1.4.2, submit to the Single Buyer in writing (or by such electronic data transmission facilities as have been agreed with the Single Buyer) any revisions to the Generation Scheduling and Dispatch Parameters to those submitted under a previous declaration to apply for the next following day or days from 0000 hours to 2400 hours for each day. The Generation Scheduling and Dispatch Parameters submitted by the Generator shall reasonably reflect the true operating characteristics.

SDC1.4.3.2 By 1000 hours each day each Generator shall in respect of each CDGU which the Generator shall have declared available under SDC1.4.2, submit to the Single Buyer in writing (or by such electronic data transmission facilities as have been agreed with the Single Buyer) the following:

(1) details of any special factors which in the reasonable opinion of the Generators may have a material effect or present an enhanced risk of a material effect on the likely output of such CDGUs. Such factors may include risks, or potential interruptions to CDGU fuel supplies, or developing plant problems. This information will normally only be used to assist in determining the appropriate level of Operating Reserve that is required under OC3;

(2) any temporary changes, and their possible duration, to the Registered Data of such CDGU;

(3) any temporary changes, and their possible duration, to the availability of Supplementary Services which may include, but not exclusively, AGC, free governor action, frequency control, reactive power.

SDC1.4.4 Least Cost Operation

SDC1.4.4.1 To meet the continuously changing demand on the Transmission System in the most economical manner, CDGUs should be, as far as practicable, committed and dispatched in accordance with the least system operating cost with a satisfactory margin.

SDC1.4.4.2 A schedule that results in least cost will be compiled by the Single Buyer each day for the following day. In compiling the schedule the Single Buyer will take account of and give due weight to the factors listed below (where applicable):

(1) CDGU Energy pricing information and methodologies as in the relevant Agreement;
(2) Hydro/thermal optimisation,
(3) Any operational restrictions or CDGU operational inflexibility;
(4) Gas volume and pressure constraints, and other fuel constraints;
(5) Minimum and maximum water-take for hydro CDGU and other factors associated with water usage or conservation;
(6) The export or import of Energy across the Interconnectors;
(7) Requirements by the State or Federal Government to conserve certain fuels;
(8) The Availability of a CDGU as declared in the Availability Notice;
(9) In cases where fuel prices are subsidized, the price to be used for scheduling shall be the price decided by the government.

SDC1.4.4.3 In accordance with SDC1.4.4.1 and SDC1.4.4.2 above the Single Buyer shall prepare a least cost Unconstrained Schedule and a least cost Constrained Schedule.

SDC1.4.5 Unconstrained Schedule

SDC1.4.5.1 The Single Buyer will prepare a least cost Unconstrained Schedule, starting with the CDGU at the head of the schedule and the next highest CDGU that will:

(1) in aggregate be sufficient to match at all times the forecast Transmission System Demand (derived under OC1) together with such Operating Reserve (derived from OC3); and
(2) in aggregate be sufficient to match minimum Demand levels allowing for later Demand.

SDC1.4.5.2 The least cost Unconstrained Schedule shall take into account the following;

(1) the requirements as determined by the GSO for voltage control and Mvar reserves;
(2) in respect of a CDGU the MW values registered in the current Scheduling and Dispatch Parameters (SDP);
(3) the need to provide an Operating Reserve, as specified in OC3;
(4) CDGU stability, as determined by the GSO following advice from the Generator and registered in the SDP;
(5) the requirements for maintaining frequency control (in accordance with SDC3);
(6) the inability of any CDGU to meet its full Spinning Reserve capability or its Non-Spinning Reserve capability;
(7) the availability of Supplementary Services;
(8) Demand Reductions possible from Directly Connected Customers and/or Network Operators and/or Distributors;
(9) Operation of a CDGU over periods of low Demand to provide sufficient margin in the view of the GSO to meet anticipated increases in Demand later in the current schedule day or the next following schedule day;
(10) Transfers to or from Interconnected Parties (as agreed and allocated by the Single Buyer).

SDC 1.4.6 Constrained Schedule

SDC1.4.6.1 From the least cost Unconstrained Schedule the Single Buyer will produce a least cost Constrained Schedule, which will optimise overall operating costs and maintain a prudent level of Transmission System security in accordance with the Transmission System Reliability Standards, and in accordance with Prudent Utility Practice.

SDC1.4.6.2 The least cost Constrained Schedule shall take account of:

(1) Transmission Network constraints;
(2) Distribution Network constraints if applicable;
(3) testing and monitoring and/or investigations to be carried out under OC10 and/or commissioning and/or acceptance testing under the CC;
(4) System tests being carried out under OC11;
(5) any provisions by the GSO under OC7 for the possible islanding of the Transmission System that require additional CDGUs to be Synchronised as a contingency action;

(6) re-allocation of Spinning Response and Non-Spinning Response to take account of Transmission Network or Distribution Network constraints that affect the application of such reserve, and to take account of the possibility of islanding; and

(7) any other factors that may inhibit the application of the least cost Unconstrained Schedule.

SDC1.4.6.3 The least cost Constrained Schedule will be deemed the Least Cost Generation Schedule for the following day.

SDC1.4.6.4 After the completion of the scheduling process, but before the issue of the Generation Schedule, the GSO may deem it necessary to make adjustments to the output of the scheduling process. Such adjustments would be made necessary by the following factors:

(1) changes to Offered Availability and/or Generation Scheduling and Dispatched Parameters of CDGUs, notified to the GSO and Single Buyer after the commencement of the scheduling process;

(2) changes in fuel supply availability and/or allocation;

(3) changes to transmission constraints, emerging from the necessarily iterative process of Scheduling and network security assessment, including either changes to the numerical values prescribed to existing constraint groups, or identification of new constraint groups;

(4) changes to CDGU requirements within constrained groups following notification to the GSO and Single Buyer of the changes in capability; and

(5) changes to any conditions which in the reasonable opinion of the GSO, would impose increased risk to the Transmission System and would therefore require the GSO to increase operational reserve levels. Examples of these conditions are:

(i) unpredicted transmission equipment outages which places more than the equivalent of one large CDGU at risk to any fault;

(ii) unpredicted outage of Generating Plant equipment which imposes increased risk to the station output;

(iii) volatile weather situation giving rise to low confidence in Demand forecasts; and

(iv) severe (unpredicted) weather conditions imposing high risk to the Transmission System;

(6) limitations and/or deficiencies of the scheduling process computational algorithms of the GSO;

(7) allocation of Operating Reserve and to take account of CDGUs which have been given permission or are otherwise allowed not to operate in a Frequency Sensitive mode;

(8) other factors that may mean that a CDGU is chosen other than in accordance with the Least Cost Operation:

(i) adverse weather is anticipated;

(ii) a Yellow Warning has been issued;

(iii) Demand Control has been instructed by the GSO; or

(iv) a Total Blackout or Partial Blackout exists.

A written record all of these adjustments must be kept by the GSO, for a period of at least twelve (12) months.

SDC1.4.6.5 The Synchronizing and De-Synchronizing times shown in the Generation Schedule are indicative only and it should be borne in mind that the Dispatch instructions could reflect more or different CDGU than in the Generation Schedule. The GSO may issue Dispatch instructions in respect of any CDGU in accordance with its Declared Availability. Generators must ensure that their Generating Units are able to be synchronized at the times Scheduled but only if so Dispatched by the GSO by issue of a Dispatch Instruction.

SDC1.4.6.6 The Generation Unit Commitment will be issued to CDGUs by 1700 hours each day for the following day or days, providing that all necessary information was made available by 1000 hours. The GSO may instruct CDGUs before the issue of the Generation Schedule for the Schedule Day to which the instruction relates, if the length of Notice to Synchronise requires the instruction to be given at the time. The Generation Unit Commitment received by each Generator will contain only information relating to its CDGUs.

SDC1.4.6.7 The least cost Unconstrained and Constrained Schedule, for each day will be used by the Single Buyer for settlement purposes. In the case of any change of Generation Scheduling and Dispatch Parameters from the relevant Agreement, these shall be notified to the Single Buyer.

SDC1.4.6.8 If a revision to an Availability Declaration, Generation Scheduling and Dispatch Parameters or Generation Other Relevant Data is received by the Single Buyer prior to 1700 hours on the day prior to the relevant Schedule Day or Schedule Days, the Single Buyer shall, if there is sufficient time prior to the issue of the Generation

Schedule, take into account the revised Availability Declaration, Generation Scheduling and Dispatch Parameters or Generation Other Relevant Data in preparing the Generation Schedule.

SDC1.4.6.9 If a revision in Availability Declaration, Generation Scheduling and Dispatch Parameters or Generation Other Relevant Data is received by the GSO and the Single Buyer on or after 1700 hours in each Scheduling day but before the end of the next following Schedule Day or Schedule Days, the GSO and the Single Buyer shall, if it re-schedules the CDGUs available to generate, take into account the revised Availability Declaration, Generation Scheduling and Dispatch Parameters or Generation Other Relevant Data in that rescheduling.

SDC1.5 Other Relevant Data

SDC1.5.1 Other Relevant Generator Data

SDC1.5.1.1 By 1000 hours each Scheduling Day each Generator shall in respect of each CDGU which the Generator shall have declared available under SDC1.4.2, submit to the Single Buyer in writing (or by such electronic data transmission facilities as have been agreed with the Single Buyer) the following:

(a) details of any special factors which in the reasonable opinion of the Generator may have a material effect or present an enhanced risk of a material effect on the likely output of such CDGUs. Such factors may include risks or potential interruptions to CDGU fuel supplies or developing plant problems. This information will normally only be used to assist in determining the appropriate level of Operating Reserve that is required under OC3;

(b) any temporary changes, and their possible duration, to the Registered Data of such CDGU;

(c) any temporary changes, and their possible duration, to the availability of Supplementary Services;

(d) details of any CDGU's commissioning or recommisioning or changes in the commissioning or recommissioning programmes submitted earlier.

SDC1.5.2 Distribution Network Data

SDC1.5.2.1 By 1000 hours each Scheduling Day each Distributor will submit to the Single Buyer in writing (or by such electronic data transmission facilities as have been agreed with the Single Buyer) confirmation or notification of the following in respect of the next following Availability Declaration Period or Periods:

(a) constraints on its Distribution System which the Single Buyer may need to take into account; and

(b) the requirements of voltage control and MVAr reserves which the GSO may need to take into account for Grid System security reasons.

SDC1.6 Data Validity Checking

SDC1.6.1 The following data items together with any revisions to those data items, submitted by each Generator entered into computer systems of the Single Buyer producing the Generation Schedule will be checked for validity with the Data Validity and Default Rules and will be automatically amended in accordance with those rules if the data items do not meet the requirements of those rules:

(1) the Availability Declaration (and other data listed under the Availability Declaration heading in Appendix 1);

(2) the Generation Scheduling and Dispatch Parameters revisions; and

(3) the data listed under SDC1.5.1 (Other Relevant Generator Data).

SDC1.6.2 If any CDGU fails to submit to the Single Buyer by 1000 hours each Scheduling Day any of the data and information required to be submitted pursuant to SDC1.4.2, SDC1.4.3, SDC1.4.4 for entry into the computer systems of the Single Buyer producing the Generation Schedule, the data items to be used will be determined in accordance with the Data Validity and Default Rules. In any other case, the data items to be used will be the last valid data items submitted for the relevant Dispatch Unit.

SDC1.6.3 Any data which has been subjected to the Data Validity and Default Rules (whether or not amended or determined in accordance with those rules) which is inconsistent with other data will be amended in accordance with the Data Consistency Rules.

SDC1.6.4 In the event that any data item of a CDGU is amended or determined in accordance with this SDC1.6, the appropriate data items will be made available to the Generator.

SDC1.6.5 It is the responsibility of the User to submit accurate data and also to notify the Single Buyer immediately of any changes to their data.

SDC1.7 Demand Reduction Data

SDC1.7.1 By 1000 hours each Scheduling Day Directly Connected Customers able to provide Demand Reduction will submit to the Single Buyer in writing (or by such electronic data transmission facilities as have been agreed with the Single Buyer) or notification of the following in respect of the next following Availability Declaration Period:

(1) demand in discrete MW blocks that can be made available for control and the times when this control may be exercised;
(2) the notice required for each discrete MW block to be switched out and subsequently switched back in; and
(3) the price for each discrete MW block as specified in the relevant Agreement.

SDC1.7.2 It should be noted that Demand Reduction in this SDC1 is for the purpose of optimising the total cost of Transmission Operation, and is not the same as Demand Control where there is insufficient generation, described in OC4. It follows that, while the same Demand block may be offered for Demand Reduction and available for Demand Control it cannot be utilised for both purposes simultaneously and that the GSO may wish to retain for Demand Control any or all Demand blocks offered for Demand Reduction. Demand blocks utilised for Demand Control under OC4 will not be paid the price specified in the relevant Agreement.

SDC1.7.3 A schedule of Demand Reduction received by each Directly Connected Customer will contain only information relating to that customer's demand.

SDC1.8 External System Transfer Data

SDC1.8.1 Where an externally Interconnected Party outside Peninsular Malaysia is connected with the Transmission System for the purpose of system security enhancement and economic operation (e.g. sharing of spinning reserve) the generation scheduling and hence power transaction will be governed by agreed Interconnection Operation Manual and any other relevant Agreements..

<End of Scheduling and Dispatch Code 1: Generation Scheduling – Main Text>

Scheduling and Dispatch Code 1 - Appendix 1

SDC1 APPENDIX 1

SDC1A.1 **Generation Scheduling and Dispatch Parameters**

SDC1A.1.1 **Availability Declaration**

SDC1A.1.1.1 For each CDGU the following items of Availability Declaration data are required;

(1) CDGU availability, (start time and date);
(2) Dispatch Unit regime unavailability, (day, start time, end time);
(3) Dispatch Unit time required for Notice to Synchronise;
(4) Loading blocks in MW following Synchronisation where applicable;
(5) Loading and de-loading rates; and
(6) The MW and Mvar capability limits within which the CDGU is able to operate as shown in the relevant Generator Performance Chart; and
(7) Maximum Generation increase in output above Offered Availability.

SDC1A.1.1.2 In addition the Minimum Generation capability is required to be confirmed if there has been any change since the last Availability Notice.

SDC1A.1.1.3 Where required by the GSO two-shifting limitations (limitations on the number of start-ups per Schedule Day) will be included as follows;

(a) Maximum Loading rates for the various levels of warmth and for up to two output ranges including soak times where appropriate;
(b) Maximum De-Loading rates for up to two output ranges;
(c) Maximum number of on-Load cycles per twenty four (24) hour period, together with the maximum Load increases involved.

SDC1A.1.2 **Generation Scheduling and Dispatch Parameters**

SDC1A.1.2.1 For each CDGU the following Scheduling and Dispatch Parameters are required;

(a) CDGU inflexibility (inflexibility description, start date and time, end date and time, MW. The inflexibility can only be a minimum MW level or an exact MW level);
(b) Station Synchronising interval;
(c) Station De-Synchronising Intervals;
(d) CDGU Basic Data:
  (i) Minimum Generation;
  (ii) Spinning Reserve Level (relates to Five Minute Reserve capability as per OC3);
  (iii) Minimum Shutdown time;
(e) CDGU Two Shifting Limit;
(f) CDGU loading rates (up to three rates);
(g) CDGU loading rate MW breakpoints (up to two breakpoints);
(h) CDGU deloading rates (up to three rates with up to two MW breakpoints);
(i) CDGU loading rates (up to three rates with up to two MW breakpoints covering the range from Minimum Generation to CDGU Registered Capacity);
(j) CDGU de-loading rates (up to three rates with up to two MW breakpoints covering the range from Minimum Generation to CDGU Registered Capacity);
(k) Maximum Generation reduction in MVAr generation capability; and
(l) Maximum Generation - confirmation of ability to operate in Frequency Sensitive mode.

<End of Scheduling and Dispatch Code 1: Appendix 1>

SDC2: Control, Scheduling and Dispatch

SDC2.1 Introduction

SDC2.1.1 Scheduling and Dispatch Code No 2 (SDC2) sets out the procedure for the GSO:

(1) to issue Dispatch instructions to Power Producers in respect of their CDGUs;
(2) to optimise overall Transmission System operations for the Scheduled Day; and
(3) to issue instructions in relation to Supplementary Services.

SDC2.2 Objective

SDC2.2.1 This procedure is for the issue of Dispatch instructions to Generators, confirmation, approval and execution of transfers with Interconnected Parties, by the GSO, utilising the Least Cost Generation Schedule derived from SDC1, as prepared by the GSO, with an appropriate margin of reserve, whilst maintaining the integrity of the Transmission System together with the necessary security of supply.

SDC2.2.2 It also provides the procedure to carry out a re-optimising of the Generation Schedule as may be required in the reasonable opinion of the GSO in real time.

SDC2.3 Scope

SDC2.3.1 SDC2 applies to the GSO, Single Buyer, and to Users which in SDC2 are:

(1) Generators with a CDGU;
(2) Grid Owner;
(3) Interconnected Parties;
(4) Distributors;
(5) Network Operators; and
(6) Directly Connected Customers who can provide Demand Reduction in real time.

SDC2.4 Procedure

SDC2.4.1 Information Used

SDC2.4.1.1 The information which the GSO shall use in assessing which CDGUs to Dispatch will be:

(1) the Least Cost Generation Schedule;

(2) Changes to any parameters used in the derivation of the Least Cost Generation Schedule following preparation of the Least Cost Generation Schedule;

(3) the provision of Supplementary Services taking into account changes to any parameters used in the derivation of the Least Cost Generation Schedule following preparation of the Least Cost Generation Schedule; and

(4) Planned transfer levels across Interconnectors.

SDC2.4.1.2 Subject as provided below, the factors used in the Dispatch phase in assessing which CDGUs to Dispatch, in conjunction with the Least Cost Generation Schedule as derived under SDC1, will be those used by the GSO to compile the Least Cost Generation Schedule under SDC1.

SDC2.4.1.3 Additional factors which the GSO will, however, also take into account are the actual performance in real time of Generators, Externally Interconnected Parties and Network Operators, agreed special actions (including Demand Control) and variation between forecast and actual demand as these will have an effect on Dispatch.

SDC2.4.1.4 The GSO will select which CDGUs to Schedule on a random basis if two or more CDGUs have submitted identical data in accordance with SDC1. The GSO may revise this selection if, in its reasonable judgement, this will give rise to a reduction in transmission losses higher system reliability and enhanced fuel security..

SDC2.4.2 Re-optimisation of Generation Schedule

SDC2.4.2.1 The GSO will revise the Least Cost Generation Schedule to be as optimal as possible when, in its reasonable judgement, a need arises. As it may be the case that no notice will be given prior to this re-optimisation it is a requirement that Generators always inform the GSO and Single Buyer of changes of Availability Declarations and Generation Scheduling and Dispatch Parameters immediately.

SDC2.5 Dispatch Instructions

SDC2.5.1 Issue and Variation

SDC2.5.1.1 Dispatch instructions relating to the Schedule Day will normally be issued at any time during the period beginning immediately after the issue of the Least Cost Generation Schedule in respect of that Schedule Day.

SDC2.5.1.2 Instructions, other than by electronic signals, which may be sent directly to the generating unit, will always be to the Generator at the Generator's designated Control Room for its Generating Plant.

SDC2.5.1.3 Dispatch instructions will recognise the Declared Availability, Generation Scheduling and Dispatch Parameters and Generation Other Relevant Data supplied to the GSO under SDC1 and any revisions under SDC1 or SDC2 to that data. A Dispatch instruction may be subsequently cancelled or varied, including an instruction for a Cancelled Start.

SDC2.5.1.4 The GSO may issue Dispatch instructions for any CDGU in respect of which an Availability Declaration (or revised Availability Declaration) has been made in accordance with its Declared Availability as set out in the original or a revised, as the case may be, Availability Declaration, even if that CDGU was not included in the Generation Schedule. The GSO is entitled to assume that each CDGU subject to the time dependent limitations on availability, is available to the extent declared in the latest Availability Declaration unless and until it is informed of any change.

SDC2.5.2 Scope of Dispatch Instructions for CDGUs

SDC2.5.2.1 In addition to instructions relating to Dispatch of Active Power, Dispatch instructions may include:

(a) Notice to Synchronise - notice and changes in notice to Synchronise or De-Synchronise CDGUs in a specific timescale;

(b) Active Power Output;

(c) Supplementary Services;

(d) Reactive Power - to ensure that a satisfactory System voltage profile is maintained and that sufficient Reactive Power reserves are maintained, Dispatch instructions may include, in relation to Reactive Power:

(i) MVAr Output - the individual MVAr output from the CDGU onto the Transmission System on the higher voltage side of the generator step-up transformer.

(ii) Target Voltage Levels - target voltage levels to be achieved by the CDGU on the Transmission System on the higher voltage side of the generator step-up transformer. Where a CDGU is instructed to a specific target voltage, the CDGU must achieve that target within a tolerance of ±1 kV (or such other figure as may be agreed with the GSO) by tap changing on the generator step-up transformer, unless agreed otherwise with the GSO.

Under normal operating conditions, once this target voltage level has been achieved, the CDGU will not tap again without prior consultation with, and with the Agreement of the GSO.

However, under certain circumstances the CDGU may be instructed to maintain a target voltage until otherwise instructed and this will be achieved by tap changing on the generator step-up transformer without reference to the GSO.

(iii) Tap Changes - details of the required generator step-up transformer tap changes in relation to a CDGU. The instruction for tap changes may be a Simultaneous Tap Change instruction, whereby the tap change must be effected by the Generator in response to an instruction from the GSO issued simultaneously to relevant Generators. The instruction, which is normally preceded by advance notice, must be effected as soon

as possible, and in any event within one (1) minute of receipt from the GSO of the instruction;

(iv) Maximum MVAr Output ("maximum excitation") - under certain conditions, such as low Grid System voltage, an instruction to maximum MVAr output as defined by the generator capability chart at instructed MW output ("maximum excitation") may be given, and a Generator should take appropriate actions to maximise MVAr output unless constrained by plant operational limits or safety grounds (relating to personnel or plant);

(v) Maximum MVAr Absorption ("minimum excitation") - under certain conditions, such as high System voltage, an instruction to maximum MVAr absorption as defined by the generator capability chart at instructed MW output ("minimum excitation") may be given, and a Generator should take appropriate actions to maximise MVAr absorption unless constrained by plant operational limits or safety grounds (relating to personnel or plant).

In addition:

(vi) the issue of Dispatch instructions for Active Power at the Connection Point will be made with due regard to any resulting change in Reactive Power capability and may include instruction for reduction in Active Power generation to enable an increase in Reactive Power capability;

(vii) the excitation system, unless otherwise agreed with the GSO, must be operated only in its constant terminal voltage mode of operation with VAR limiters in service, with any constant Reactive Power output as control mode or constant Power Factor output control mode always disabled, unless agreed otherwise with the GSO. In the event of any change in System voltage, a Generator must not take any action to override automatic MVAr response which is produced as a result of constant terminal voltage mode of operation of the automatic excitation control system unless instructed otherwise by the GSO or unless immediate action is necessary to comply with Stability Limits or unless constrained by plant operational limits or safety grounds (relating to personnel or plant);

(viii) a Dispatch instruction relating to Reactive Power will be implemented without delay and will be achieved not later than two (2) minutes after the instruction time, or such longer period as the GSO may instruct;

(ix) in circumstances where the GSO issues new instructions in relation to more than one CDGU at the same Power Station at the same time, tapping will be carried out by the Generator, one tap at a time either alternately between (or in sequential order, if more than two), or at the same time on, each CDGU;

(x) where the instructions require more than two taps per CDGU and that means that the instructions cannot be achieved within two (2) minutes of the instruction time (or such longer period as the GSO may have instructed), the instructions must each be achieved with the minimum of delay after the expiry of that period;

(xi) on receiving a new MW Dispatch instruction, no tap changing shall be carried out to change the MVAr output unless there is a new MVAr Dispatch instruction;

(xii) where an instruction to Synchronise is given, or where a CDGU is Synchronised and a MW Dispatch instruction is given, a MVAr Dispatch instruction consistent with the CDGU's relevant parameters may be given. In the absence of a MVAr Dispatch instruction with an instruction to Synchronise, the MVAr output should be 0 MVAr.

(xiii) where an instruction to De-Synchronise is given, a MVAr Dispatch instruction, compatible with shutdown, may be given prior to De-Synchronisation being achieved. In the absence of a separate MVAr Dispatch instruction, it is implicit in the instruction to De-Synchronise that MVAr output should at the point of synchronism be 0 MVAr at De-Synchronisation;

(xiv) it should be noted that should Grid System conditions require, the GSO may need to instruct maximum MVAr output to be achieved as soon as possible, but (subject to the provisions of paragraph (x) above) in any event no later than two (2) minutes after the instruction is issued;

(xv) On receipt of a Dispatch instruction relating to Reactive Power, the Generator may take such action as is necessary to maintain the integrity of the CDGU

(including, without limitation, requesting a revised Dispatch instruction), and must contact the GSO without delay;

(e) Frequency Sensitive Mode - reference to any requirement for change to or from Frequency Sensitive Mode for each CDGU as detailed in SDC3;

(f) Maximum Generation - a requirement to provide any Maximum Generation offered under the Scheduling process in SDC1;

(g) Future Dispatch Requirements - a reference to any implications for future Dispatch requirements and the security of the Transmission System, including arrangements for change in output to meet post fault security requirements;

(h) Intertrips - an instruction to switch into or out of service an Operational Intertripping scheme;

(i) Abnormal Conditions - instructions relating to abnormal conditions, such as adverse weather conditions, or high or low System voltage, operation under System islanding conditions as referred to in OC7 which may mean that the Least Cost Generation Schedule is departed from to a greater extent than usual. Revised operational data, replacing for example the current Generation Scheduling and Dispatch Parameters with revised parameters, may also apply pursuant to OC7.

(j) Tap Positions - a request for a CDGU step-up transformer tap position (for security assessment);

(k) Tests - an instruction to carry out tests as required under OC10.

(l) Synchronous condensor mode – operation of a synchronised hydro unit and providing no power into the transmission system.

SDC2.5.2.2 Dispatch instructions will indicate the target MW (at Target Frequency) to be provided at the Connection Point, and to be achieved in accordance with the respective CDGU's Generation Scheduling and Dispatch Parameters given under (or as revised in accordance with) SDC1 or SDC2, or such rate within those Parameters as is specified by the GSO in the Dispatch instructions. The form of and terms to be used by the GSO in issuing instructions together with their meanings are set out in Appendix 1 in the form of a non-exhaustive list of examples.

SDC2.5.2.3 Dispatch instructions will be given by telephone (and will include an exchange of operator names) or by automatic logging device or by electronic instruction.

SDC2.5.2.4 They must be formally acknowledged immediately by the Generator for the Generating Plant in respect of that CDGU by telephone or automatic logging device, or a reason given immediately for non-acceptance, which may only be on safety grounds (relating to personnel or plant) or because they are not in accordance with the applicable Declared Availability, Generation Scheduling and Dispatch Parameters or Generation Other Relevant Data.

SDC2.5.2.5 Each Generator will comply in accordance with all Dispatch instructions properly given by the GSO unless the Generator has given notice to the GSO regarding non-acceptance of Dispatch instructions.

SDC2.5.2.6 In the event that in carrying out the Dispatch instructions, an unforeseen problem arises, caused on safety grounds (relating to personnel or plant), the GSO must be notified without delay by telephone.

SDC2.5.2.7 Dispatch instructions will be in accordance with Generation Scheduling and Dispatch Parameters and Generation Other Relevant Data registered under SDC1 or as amended under SDC1 or SDC2.

SDC2.5.2.8 Generators will respond to Dispatch instructions properly given by the GSO with no more than the delay, as defined by the response times set out below provided that in the case of Emergency Instructions issued pursuant to SDC2.6 the obligation of the Generator shall be only to use all reasonable endeavours to so respond.

SDC2.5.2.9 Generators will only Synchronise or De-Synchronise CDGUs to the Dispatch instructions of the GSO or unless that occurs automatically as a result of intertrip schemes or Low Frequency Relay operations. De-Synchronisation may take place without prior Agreement of the GSO if it is done purely on safety grounds (relating to personnel or plant). If that happens the GSO must be informed immediately that it has taken place.

SDC2.5.2.10 The GSO may suspend the issue of Dispatch instructions in accordance with the Least Cost Generation Schedule to Generating Plant to the extent that reports or data via the SCADA system that indicates a Partial Blackout or Total Blackout may be imminent or exists. When necessary the GSO will issue instructions for a Black Start.

SDC2.5.2.11 Each Generator in respect of any of its Generating Plant will without delay notify the GSO by telephone (or by such electronic data transmission facilities as have been agreed with the GSO) of any change or loss (temporary or otherwise) to the operational capability including any changes to the Generation Scheduling and Dispatch Parameters or Generation Other Relevant Data supplied under SDC1 (and any revisions under SDC1 and SDC2 to the data) of each CDGU.

SDC2.5.2.12 If, for any reason, including a change of Declared Availability or Generation Scheduling and Dispatch Parameters made by the Generator or the submission of Generation Other Relevant Data, the prevailing Dispatch instruction in respect of any CDGU is no longer within the applicable Declared Availability, Generation Scheduling and Dispatch Parameters, or Generation Other Relevant Data then:

(a) the Generator will use reasonable endeavours to secure that a revised Dispatch instruction be given by the GSO such that the new Dispatch instruction is within the now applicable Declared Availability and/or Generation Scheduling and Dispatch Parameters and/or Generation Other Relevant Data; and

(b) if the GSO fails to issue such a new Dispatch instruction within a reasonable time then the relevant Generator shall be entitled to change the operation of such CDGU to bring its operation within the applicable Declared Availability and/or Generation Scheduling and Dispatch Parameters and/or Generation Other Relevant Data until the GSO issues a new Dispatch instruction within the applicable Declared Availability and/or Generation Scheduling and Dispatch Parameters and/or Generation Other Relevant Data. Prior to making such a change in operation, the Generator will use reasonable endeavours to advise the GSO (by telephone and then confirmed by facsimile transmission) of its intended action and its timing. The confirmation must be sent as soon as possible after the telephone call, but in the event that it is

not possible to send it prior to the change of operation being affected, the change may be effected prior to the notification. Any change in operation should be of the minimum necessary to remain within the applicable Declared Availability and/or Generation Scheduling and Dispatch Parameters and/or Generation Other Relevant Data.

SDC2.5.2.13 A Generator may request Agreement of the GSO for one of the CDGUs to be operated under a risk of a trip. The Agreement will be dependent on the risk to the Transmission System that a trip of the CDGU would constitute.

SDC2.5.2.14 Each Generator will operate its Synchronised CDGUs with AVRs in constant terminal voltage mode with VAR limiters in service at all times. AVR constant Reactive Power or power factor mode should, if installed, be disabled, and its generator step-up transformer tap changer selected to manual mode unless released from this obligation in respect of a particular CDGU by the GSO. Where a power system stabiliser is fitted as part of an excitation system of a CDGU, it requires on-load commissioning which must be witnessed by the GSO. Only when the performance of the power system stabiliser has been approved by the GSO shall it be switched into service by a Generator and then it will be kept in service at all times unless otherwise agreed with the GSO.

SDC2.5.2.15 A Generator may request the Agreement of the GSO for one of its CDGUs to be operated with the AVR in manual mode, or power system stabiliser switched out, or VAR limiter switched out. The Agreement of the GSO will be dependent on the risk that would be imposed on the Transmission System and any User System.

SDC2.5.2.16 Dispatch instructions may be given by telephone, facsimile or electronic message from the GSO. Instructions will require formal acknowledgement by the Generator and will be recorded by the GSO in a written Dispatch log with the exception of the SCADA set point instructions. When appropriate electronic means are available, Dispatch instructions shall be confirmed electronically. Generators shall also record all manual Dispatch instructions in a written Dispatch log.

SDC2.5.2.17 Such Dispatch logs and any other available forms of archived instructions, for example, telephone recordings, shall be provided to the investigation team of the Energy Commission when required.

Otherwise, written records shall be kept by all parties for a period not less than five (5) years or as required by the relevant Agreement and voice recordings for a period not less than three (3) months.

SDC2.5.2.18 If, at any time, the GSO determines after consultations with the Generators that:

(a) continued synchronised operation of the generating facility may endanger the Grid System personnel;

(b) continued synchronised operation of the generating facility may endanger the Grid System integrity;

(c) continued synchronised operation of the generating facility may prevent maintenance of the Grid System's facilities; or

(d) the Generator's protective apparatus is not fully in service,

the GSO will have the right to disconnect the generation facility from the Grid System. The generating facility will remain disconnected until such time as the GSO is satisfied that the condition(s) above has been corrected. The GSO shall also notify the Single Buyer of any of the conditions (a) through (d).

SDC2.5.3 Scope of Dispatch Instructions for Distributors, Network Operators and Directly Connected Customers who have agreed to Provide Demand Reduction.

SDC2.5.3.1 Dispatch instructions relating to the Schedule Day will normally be issued at any time during the period beginning immediately after the issue of the Least Cost Generation Schedule in respect of that Schedule Day.

SDC2.5.3.2 Dispatch instructions will recognise the Declared Availability declared, the discrete blocks made available for control and the notice required for each discrete MW block to be switched out and subsequently switched back in. A Dispatch instruction may be subsequently cancelled or varied.

SDC2.5.3.3 The GSO will issue instructions direct to the Network Operator, Distributor, or Directly Connected Customer, as the case may be, for the Dispatch of each demand block available for control. The GSO is entitled to assume that each demand block available for control, subject to the time dependent limitations on availability, is available to the extent declared in the latest Availability Declaration unless and until it is informed of any change.

SDC2.5.3.4 Dispatch instructions will include MW blocks to be controlled, times to be switched and whether the switching is for Demand Reduction as defined in SDC1.7 or Demand Control as defined in OC4. Directly Connected Customers shall respond to Dispatch instructions without delay unless constrained by plant operational limits or safety grounds (relating to personnel or plant).

SDC2.5.3.5 Each Network Operator, Distributor, or Directly Connected Customer, as the case may be, will comply in accordance with all Dispatch instructions properly given by the GSO unless the Directly Connected Customer has given notice which may only be on safety grounds (relating to personnel or plant) or because they are not in accordance with the applicable Declared Availability to the GSO regarding non-acceptance of Dispatch instructions.

SDC2.5.3.6 In the event that in carrying out the Dispatch instructions, an unforeseen problem arises, caused on safety grounds (relating to personnel or plant), the GSO must be notified without delay by telephone.

SDC2.6 Reporting

SDC2.6.1 As part of the settlement process the GSO will provide a report of the actual real time performance of each CDGU to the Single Buyer.

SDC2.6.2 The GSO shall also provide requisite operational data in a format as specified by the Grid Code Committee/Grid Operation Subcommittee to enable them to perform their functions as per GC5.2 and GC7.1.

SDC2.7 Emergency Assistance Instructions

SDC2.7.1 To preserve Grid System integrity under emergency circumstances (as determined by the GSO in the reasonable opinion of the GSO) the GSO may issue Emergency Instructions. Such Emergency Instructions will be issued by the GSO direct to the Generator's Control Room for its Generating Plant and may require an action or response which is outside Generation Scheduling and Dispatch Parameters, Generation Other Relevant Data or Notice to

Synchronise registered under SDC1 or as amended under SDC1 or SDC2. This may, for example, be:

(a) an instruction to trip a CDGU; or

(b) an instruction to Part Load a CDGU;

(c) an instruction to operate at Maximum Generation,

only requiring the Generator to use all reasonable endeavours to so respond, such Emergency Instructions must be complied with without delay. A refusal may only be given on safety grounds (relating to personnel or plant) and must be notified to the GSO immediately by telephone.

<End of Scheduling and Dispatch Code 2: Control Scheduling and Dispatch – Main Text>

Scheduling and Dispatch Code 2 - Appendix 1

SDC2A.1 **Dispatch Instructions – Loading and Synchronising**

SDC2A.1.1 **Form of Dispatch Instructions**

SDC2A.1.1.1 All loading/de-loading rates will be assumed to be in accordance with Generation Scheduling and Dispatch Parameters. Each instruction will, wherever possible, be kept simple, drawing as necessary from the following forms.

SDC2A.1.1.2 The Dispatch instructions will normally follow the form:

(a) an exchange of operator names;
(b) the specific CDGU to which the instruction applies;
(c) the output to which it is instructed;
(d) if the start time is different from the time the instruction is issued, the start time will be included;
(e) where specific loading/de-loading rates are concerned, a specific target time; and
(f) the issue time of the instruction.

SDC2A.1.2 **Dispatching a Synchronised CDGU to increase or decrease output**

SDC2A.1.2.1 If the time of the instruction is 1400 hours, the Unit is Unit 1 and the output to be achieved is 460MW, the relevant part of the instruction would be, for example: "Unit 1 to 460MW instruction timed at 1400".

SDC2A.1.2.2 If the start time is 1415 hours, it would be, for example: "Unit 1 (or Module 1) to 460MW start at 1415 hours instruction timed at 1400".

SDC2A.1.2.3 Loading and de-loading rates are assumed to be in accordance with Generation Scheduling and Dispatch Parameters unless otherwise stated. If different loading or de-loading rates are required, the time to be achieved will be stated, for example: "Unit 1 (or Module 1) to 460MW at 1420 hours target time instruction timed at 1400".

SDC2A.1.3 **CDGU Synchronising**

SDC2A.1.3.1 For CDGUs the instruction issue time will always have due regard for the time of Notice to Synchronise declared to the GSO in the relevant Agreement the Generator.

SDC2A.1.3.2 The instruction will follow the form, for example: “Unit 1 Synchronise at 1600 hours (and other units in sequence when scheduled) instruction timed at 1300 hours”.

SDC2A.1.3.3 Unless a loading programme is also given at the same time it will be assumed that the CDGUs are to be brought to Minimum Generation and (at the point of synchronism) 0 MVAr output, and on the Generator reporting that the Unit has Synchronised a further Dispatch instruction will be issued.

SDC2A.1.3.4 When a Dispatch instruction for a CDGU to Synchronise is cancelled before the Unit is Synchronised, the instruction will follow the form, for example: “Unit 1 (or Module 1), cancel Synchronising instruction, instruction timed at 1400 hours”.

SDC2A.1.4 **CDGU De-Synchronising**

SDC2A.1.4.1 The instruction will normally follow the form, for example: “Unit 1 Shutdown instruction timed at 1300 hours”.

SDC2A.1.4.2 If the instruction start time is for 1400 hours the form will be, for example: “Unit 1 Shutdown start at 1400 hours, instructions timed at 1300 hours (and other Units in sequence)”.

SDC2A.1.4.3 Both of the above assume a de-loading rate at declared Generation Scheduling and Dispatch Parameters. Otherwise the message will conclude with, for example: "... and De-Synchronise at 1500 hours".

SDC2A.1.4.4 Unless a separate MVAr Dispatch instruction is given, it will be assumed that the CDGU will be brought to 0 MVAr (at the point of synchronism) at De-Synchronisation.

SDC2A.2 Dispatch Instructions – Loading and Synchronising

SDC2A.2.1 Frequency Control

SDC2A.2.1.1 Grid System Frequency control is normally achieved by providing an AGC signals to each CDGU. All the above Dispatch will be deemed to be at the Target Frequency as transmitted by the AGC.

SDC2A.2.1.2 Where a CDGU cannot be instructed by an AGC signal, for whatever reason, and the CDGU is in the Frequency Sensitive Mode instructions refer to target output at Target Frequency. In this instance Target Frequency changes will always be given to the Generator by facsimile and will normally only be 49.95, 50.00, or 50.05Hz but in exceptional circumstances as determined by the GSO in its reasonable opinion, may be 49.90 or 50.10Hz.

SDC2A.2.1.3 CDGUs required to operate in Frequency Sensitive Mode will be specifically instructed to operate so as to provide Primary Response and/or Secondary Response and/or High Frequency Response. The instruction will be of the form, for example: "Unit 1 (or Module 1) to 450 MW Primary and High Frequency Response instruction timed at 2100 hours".

SDC2A.2.1.4 Frequency control instructions may be issued in conjunction with, or separate from, a Dispatch instruction for ordinary Active Power output.

SDC2A.2.2 Voltage Control

SDC2A.2.2.1 In order that adequate System voltage profiles and Reactive Power reserves are maintained under normal and fault conditions a range of voltage control instructions will be utilised from time to time, for example:

(a) Increase/decrease Reactive Power to 100 MVAr export or import;
(b) Maximum MVAr output (or "maximum excitation");
(c) Maximum MVAr absorption (or "minimum excitation");
(d) Increase CDGU step-up transformer tap position by [one] tap or go to tap position [x]; or
(e) For a Simultaneous Tap Change, change CDGU generator step-up transformer tap position by one [two] taps to raise or lower (as relevant) System voltage, to be executed at time of telegraph (or other) instruction;

(f) Achieve a target voltage of 280kV and then allow to vary with System conditions;

(g) Maintain a target voltage of 280kV until otherwise instructed. Tap change as necessary.

SDC2A.2.2.2 In relation to MVAr Dispatch matters, MVAr generation/output is an export onto the System and is referred to as "lagging MVAr", and MVAr absorption is an import from the System and is referred to as "leading MVAr";

SDC2A.2.2.3 It should be noted that the excitation control system constant Reactive Power output control mode or constant power factor output control mode will always be disabled, unless agreed otherwise with the GSO.

SDC2A.3 **Dispatch Instructions – Other Factors**

SDC2A.3.1 **Maximum Generation/Cancel Max Gen**

The instruction will be by facsimile instructions or if not available will be given by telephone and will normally follow the form, for example: “Unit 1 instruct Max Gen (or cancel Max Gen), instruction timed at 1800 hours”.

SDC2A.3.2 **Black Start**

The instruction will normally follow the form, for example: “Initiate Black Start procedure, instruction timed at 1900 hours”.

SDC2A.3.3 **Emergency Instructions**

The instruction will be prefixed with the words "This is an Emergency Instruction”. It may be in a pre-arranged format and normally follow the form, for example: “This is an Emergency Instruction. Reduce output to ‘X’ MW in ‘Y’ minutes, instruction timed at 2000 hours”.

<End of Scheduling and Dispatch Code 2: Control Scheduling and Dispatch Appendix 1>

SDC3: Frequency and Interconnector Transfer Control

SDC3.1 Introduction

SDC3.1.1 SDC3 sets out the procedure for the GSO to use in relation to Users to undertake the direction of System Frequency control. System Frequency will normally be controlled by AGC signals sent from the NLDC, or by Dispatch of and response from CDGUs operating in Frequency Sensitive Mode, where:

(1) there has been a failure in the AGC for whatever reasons; or
(2) a CDGU does not have the capability to accept AGC signals.

SDC3.1.2 Frequency may also be controlled by control of Demand.

SDC3.1.3 The requirements for Frequency control are determined by the consequences and effectiveness of generation Scheduling and Dispatch. Accordingly, SDC3 is complementary to SDC1 and SDC2.

SDC3.2 Objective

SDC3.2.1 The procedure for the GSO to direct System Frequency Control and is intended to enable (as far as possible) the GSO to meet the statutory requirements of System Frequency Control, and to manage tie line control in accordance with relevant Agreements with Interconnected Parties.

SDC3.3 Scope

SDC3.3.1 SDC3 applies to the GSO, Single Buyer, and to Users which in SDC3 are:

(a) Generators with a CDGU;
(b) Grid Owner;
(c) Interconnected Parties;
(d) Distributors;

(e) Network Operators; and

(f) Directly Connected Customers who can provide Demand Reduction in real time.

SDC3.4 Response from Generating Plant

SDC3.4.1 Each CDGU must at all times have the capability to operate automatically so as to provide response to changes in Frequency in accordance with the requirements of CCs in order to contribute to containing and correcting the System Frequency within the statutory requirements of Frequency control.

SDC3.4.2 Each CDGU producing Active Power must operate at all times in a Frequency Sensitive Mode.

SDC3.4.3 The GSO may issue an instruction to a CDGU to operate so as to provide Primary Response and/or Secondary Response and/or High Frequency Response. When so instructed, the CDGU must operate in accordance with the instruction.

SDC3.4.4 Frequency Sensitive Mode is the generic description for a CDGU operating in accordance with an instruction to operate so as to provide Primary Response and/or Secondary Response and/or High Frequency Response. Such instruction will continue until countermanded by the GSO or until the CDGU is De-Synchronised, whichever is the first to occur.

SDC3.4.5 A System Frequency induced change in the Active Power output of a CDGU which assists recovery to Target Frequency must not be countermanded by a Generator or the Generating Unit control system except where it is done purely on safety grounds (relating to either personnel or plant) or, where necessary, to ensure the integrity of the Generating Unit.

SDC3.5 Dispatch Instruction of the GSO in Relation to Demand Control

SDC3.5.1 The GSO may utilise Demand with the capability of Low Frequency Relay initiated Demand Reduction in establishing its requirements for Frequency Control.

SDC3.5.2 The GSO will specify within the range agreed the Low Frequency Relay settings to be applied, the amount of Demand Reduction to be available and will instruct the Low Frequency Relay initiated response to be placed in or out of service.

SDC3.5.3 Users will comply with the instructions of the GSO for Low Frequency Relay settings and Low Frequency Relay initiated Demand Reduction to be placed in or out of service. Users shall not alter such Low Frequency Relay settings or take Low Frequency Relay initiated response out of service without Agreement of the GSO, except for safety reasons. If the User takes the Low Frequency initiated Demand Reduction facility out of service without the permission of the GSO that User must inform the GSO immediately.

SDC3.5.4 The GSO may also utilise other Demand modification arrangements in order to contribute towards Operating Reserve.

SDC3.6 Response to High Frequency Required from Synchronised Plant

SDC3.6.1 Each Synchronised CDGU in respect of which the Generator has been instructed to operate so as to provide High Frequency Response, which is producing Active Power and which is operating above Designed Minimum Operating Level, is required to reduce Active Power output in response to an increase in System Frequency above the Target Frequency.

SDC3.6.2 The rate of change of Active Power output with respect to Frequency up to 50.5 Hz shall be in accordance with the provisions of the relevant Agreement between the GSO and each Generator. The reduction in Active Power output by the amount provided for in the relevant Agreement between the GSO and the Generator must be fully achieved within ten (10) seconds of the time of the Frequency increase and must be sustained at no lesser reduction thereafter. It is accepted that the reduction in Active Power output may not be to below the Designed Minimum Operating Level.

SDC3.6.3 In addition to the High Frequency Response provided, the CDGU must continue to reduce Active Power output in response to an

increase in System Frequency to 50.5 Hz or above at a minimum rate of 2 per cent (%) of output per 0.1 Hz deviation of System Frequency above that level, such reduction to be achieved within five (5) minutes of the rise to or above 50.5 Hz.

SDC3.7 Plant Operating Below Minimum Generation

SDC3.7.1 Steady state operation below Minimum Generation is not expected but if System operating conditions cause operation below Minimum Generation which gives rise to operational difficulties for the Generating Unit then the GSO should not, upon request, unreasonably withhold a Dispatch instruction to return the Generating Unit to an output not less than Minimum Generation.

SDC3.7.2 It is possible that Synchronised CDGUs which have responded as required under SDC3.6 to an excess of System Frequency, as therein described, will (if the output reduction is large or if the CDGU output has reduced to below the Designed Minimum Operating Level) trip after a time. All reasonable efforts should in the event be made by the Generator to avoid such tripping, provided that the System Frequency is below 52Hz.

SDC3.7.3 If the System Frequency is at or above 52Hz, the requirement to make all reasonable efforts to avoid tripping does not apply and the Generator is required to take action to protect the Generating Plant.

SDC3.7.4 In the event of the System Frequency becoming stable above 50.5Hz, after all Generating Plant action as specified in SDC3.6 has taken place, the GSO will issue appropriate Dispatch instructions, which may include instruction to trip CDGUs so that the Frequency returns to below 50.5Hz and ultimately to Target Frequency.

SDC3.7.5 If the System Frequency has become stable above 52 Hz, after all Generating Plant action as specified in SDC3.7.2 and SDC3.7.3 has taken place, the GSO will issue Dispatch instructions to trip appropriate CDGUs to bring the System Frequency to below 52Hz and follow this with appropriate Dispatch instructions to return the System Frequency to below 50.5 Hz and ultimately to Target Frequency.

SDC3.8 General Issues

SDC3.8.1 The Generator will not be in default of any existing Dispatch instruction if it is following the provisions of SDC3.4, SDC3.6 or SDC3.7.

SDC3.8.2 In order that the GSO can deal with the emergency conditions effectively, it needs as much up to date information as possible and accordingly the GSO must be informed of the action taken in accordance with SDC3.6 as soon as possible and in any event within five (5) minutes of the rise in System Frequency, directly by telephone from the Generating Plant.

SDC3.8.3 The GSO will use reasonable endeavours to ensure that, if System Frequency rises above 50.4Hz, and an Externally Interconnected Party is transferring Power into the Transmission System, the amount of Power transferred in to the Transmission System from the System of that Externally Interconnected Party is reduced at a rate equivalent to (or greater than) that which applies for CDGUs operating in Frequency Sensitive Mode which are producing Active Power. This will be done either by utilising existing arrangements which are designed to achieve this, or by issuing Dispatch instructions under SDC2.

SDC3.9 Frequency and Time Control

SDC3.9.1 Frequency Control

SDC3.9.1.1 The GSO will endeavour (in so far as it is able) to control the system frequency within the statutory limits of 49.5Hz and 50.5Hz by specifying changes to Target Frequency and by Generation Dispatch.

SDC3.9.2 Time Control

SDC3.9.2.1 The GSO will endeavour (in so far as it is able) to control electric clock time to within plus or minus ten (10) seconds by specifying changes to Target Frequency and by Generation Dispatch taking

into account forecast Generating Plant/Demand margins. Errors greater than plus or minus ten (10) seconds may be temporarily accepted at the reasonable discretion of the GSO.

SDC3.10 Interconnector Transfer Control - Externally Interconnected Party

SDC3.10.1 Any mutually agreed transfer of Power and/or Energy shall remain at the agreed transfer level when System Frequency is between 49.5Hz and 50.5Hz.

SDC3.10.2 If the frequency falls below 49.5Hz power transfers from the Transmission System into an Externally Interconnected Party will be reduced to zero as soon as is reasonably practical. In any case it must be accepted that at or below this frequency an Externally Interconnected Party may have disconnected the connection for preservation of its own system. The GSO must be aware of this possibility and plan Target Frequency and Generation Dispatch accordingly.

<End of Scheduling and Dispatch Code 3: Frequency and Interconnector Transfer Control >

Part VIII: Data Registration Code

DRC1 Introduction

DRC1.1 The Data Registration Code (DRC) presents a unified listing of all data required by the Grid Owner, Single Buyer and GSO from Users and by Users from the Grid Owner, Single Buyer and GSO, from time to time under the Grid Code. The data which is specified in each section of the Grid Code is collated here in the DRC. Where there is any inconsistency in the data requirements under any particular section of the Grid Code and the Data Registration Code the provisions of the particular section of the Grid Code shall prevail.

DRC1.2 The DRC identifies the section of the Grid Code under which each item of data is required.

DRC1.3 The Code under which any item of data is required specifies procedures and timings for the supply of that data, for routine updating and for recording temporary or permanent changes to that data. All timetables for the provision of data are repeated in the DRC.

DRC1.4 Various sections of the Grid Code also specify information which the Users will receive from the Grid Owner, Single Buyer and GSO. This information is summarised in a single schedule in the DRC (Schedule 9).

DRC2 Objective

DRC2.1 The objective of the DRC is to:

(a) List and collate all the data to be provided by each category of User to GSO under the Grid Code.

(b) List all the data to be provided by GSO to each category of User under the Grid Code.

DRC3 Scope

DRC3.1 The DRC applies to the GSO, Grid Owner, Single Buyer and the following Users, which in this DRC means:

(a) Generators (other than those which only have Embedded Minor Generating Plant);
(b) Distributors;
(c) Network Operators;
(d) Directly Connected Customers; and
(e) Parties seeking connection to the Transmission System or on to a User's System.

DRC4 Data Categories and Stages in Registration (Planning and Operational Data

DRC4.1 Within the DRC each data item is allocated to one of the following five categories:

(a) Preliminary Project Data (PPD)
(b) Committed Project Data (CPD)
(c) Contracted Project Data (TPD)
(d) Registered Data or Estimated Registered Data (RGD)
(e) Operational Data (including Demand Forecast Data)

DRC4.2 Preliminary Project Data is that data provided by Users or intended Users to the Grid Owner based on which the Single Buyer will make an offer of connection.

DRC4.3 Committed Project Data is that data supplied by Users to the Grid Owner, GSO and Single Buyer, or the GSO and Grid Owner to Users, to enable System planning and operation to be carried out by the Grid Owner, GSO and Users.

DRC4.4 Contracted Project Data is detailed data required by the Grid Owner, GSO and Single Buyer so that it can develop detailed models of the System, and is expected to be an accurate description of User's Plant and Apparatus. This is entered into the project database as Registered Data or Estimated Registered Data.

DRC4.5 Operational Data is data which is required by the Operating Codes and the Scheduling and Dispatch Codes and includes Demand forecast data.

DRC4.6 Data listed in the schedules attached to this DRC within the category of Preliminary Project Data will also be required as Committed Project Data, Contracted Project Data and Registered Planning Data. Data listed in the schedules attached to this DRC within the category of Contracted Project Data will also be required as Registered Planning Data.

DRC5 Procedures and Responsibilities

DRC5.1 In accordance with the provisions of the various sections of the Grid Code, each User must submit data as summarised in DRC7 and listed and collated in the attached schedules.

DRC5.2 Wherever possible the data schedules to the DRC are structured to serve as standard formats for data submission and such format must be used for the written submission of data to the Grid Owner, GSO and Single Buyer. Data must be submitted to the department or address as the Grid Owner, GSO and Single Buyer may from time to time advise. The name of the person at the User who is submitting each schedule of data must be included.

DRC5.3 Where a computer data link exists between a User and the GSO, data may be submitted via this link. The GSO will, in this situation, provide computer files for completion by the User containing all the data in the corresponding DRC schedule.

DRC6 Confidentiality of Data and Requirement to Provide Appropriate Data

DRC6.1 Users, Grid Owner and the GSO are obliged to supply data as set out in the individual sections of the Grid Code and repeated in the DRC. If a User fails to supply data when required by any section of the Grid Code, the Grid Owner and GSO will estimate such data if and when, in the view of the Grid Owner and GSO, it is necessary to do so. If the Grid Owner and GSO fail to supply data when required by any section of the Grid Code, the User to whom that data ought to have been supplied will estimate such data if and when, in that User's view, it is necessary to do so.

Such estimates will, in each case, be based upon data supplied previously for the same Plant or Apparatus or upon corresponding data for similar Plant or Apparatus or upon such other information as the Grid Owner and GSO or that User deems appropriate.

DRC6.2 The Grid Owner and GSO will advise a User in writing of any estimated data it intends to use relating directly to that User's Plant or Apparatus in the event of data not being supplied.

DRC6.3 It is the responsibility of the recipient of any item of data to ensure that each item of data remains confidential and is not made available to any third party.

DRC7 Schedules of Data to be Registered

DRC7.1 Schedules 1 to 14 attached cover the following data areas.

SCHEDULE 1 - GENERATING UNIT (OR CCGT Module) TECHNICAL DATA.
Comprising Generating Unit fixed electrical parameters.

SCHEDULE 2 - GENERATION PLANNING PARAMETERS AND AVAILABILITY DATA.
Comprising the Generating Plant parameters required for Operational Planning studies and certain data required under SDC1.

SCHEDULE 3 - GENERATING PLANT OUTAGE PROGRAMMES, OUTPUT USABLE AND INFLEXIBILITY INFORMATION.
Comprising generation outage planning, Output Usable and inflexibility information at timescales down to the daily Availability Declaration. Also contract information where External Interconnections are involved.

SCHEDULE 4 - EMBEDDED GENERATING PLANT OUTPUT FORECASTS.
Output predictions for Power Stations not subject to Central Dispatch.

SCHEDULE 5 - USER'S SYSTEM DATA.
Comprising electrical parameters relating to Plant and Apparatus connected to the Transmission System.

SCHEDULE 6 – USER'S OUTAGE INFORMATION.
Comprising the information required by GSO for outages on the Users System, including outages at Power Stations other than outages of Centrally Dispatched Generating Units.

SCHEDULE 7 - LOAD CHARACTERISTICS.
Comprising the estimated parameters of load groups in respect of, for example, harmonic content and response to frequency.

SCHEDULE 8 – POWER TRANSFERS FROM EXTERNALLY INTERCONNECTED PARTIES TO THE SINGLE BUYER AND GSO.
Comprising Power transfer schedules on a daily basis.

SCHEDULE 9 - DATA SUPPLIED BY THE GRID OWNER AND GSO TO USERS.

SCHEDULE 10 - USER'S DEMAND PROFILES AND ACTIVE ENERGY DATA
Comprising information relating to the User's total Demand and Active Energy taken from the Transmission System.

SCHEDULE 11 - CONNECTION POINT DATA
Comprising information relating to Demand, demand transfer capability and a summary of Customer generation connected to the Connection Point or Grid Supply Point.

SCHEDULE 12 - DEMAND CONTROL DATA
Comprising information related to Demand Control.

SCHEDULE 13 - FAULT INFEED DATA FROM USERS
Comprising information relating to the Short Circuit contribution to the Transmission System from Users other than Generators.

SCHEDULE 14 - FAULT INFEED DATA
Comprising information relating to the Short Circuit contribution to the Transmission System from Generators.

The Schedules applicable to each class of User are as follows:

Power Producers with Generating Plant	Schedules 1, 2 ,3, 9, 14
Power Producers with Embedded Generating Plant	Schedules 1, 3, 4, 9
All Users connected directly to the Transmission System	Schedules 5, 6, 9
All Users connected directly to the Transmission System other than Power Producers	Schedules 10, 11, 13
All Users connected directly to the Transmission System with Demand	Schedules 7, 9
Externally Interconnected Parties	Schedule 8

All Network Operators	Schedule 12

<End of Data Registration Code – Main Text>

Data Registration Code Schedule 1 – Generating Unit Technical Data

GENERATING UNIT TECHNICAL DATA

POWER STATION DATA:_____ DATE:_____

DATA DESCRIPTION	UNITS	DATA CAT	VALUE
GENERATING UNIT:			
Identification designation	Text		
Manufacturer	Text		
Manufacturer model/number	Text		
Year of manufacture	Text		
Generator Type (e,g round rotor, salient pole	Text		
Rating	MVA	PPD	
Overload Capacity (if any)	MVA	RGD	
Rated speed	rpm	PPD	
Nominal Voltage at generator terminals	kV	PPD	
Maximum allowable limit of voltage at terminals	kV	CPD	
Performance Chart at Generating Unit stator terminals	Graph	CPD	
IMPEDANCES			
Armature resistance (Ra)	p.u.	CPD	
Direct axis unsaturated synchronous reactance (Xd)	p.u.	CPD	
Direct axis unsaturated transient reactance (X'd)	p.u.	CPD	
Direct axis unsaturated sub-transient reactance (X"d)	p.u.	CPD	
Quadrature axis unsaturated synchronous reactance (Xq)	p.u.	CPD	
Quadrature axis unsaturated sub-transient reactance(X"q)	p.u.	CPD	
Negative sequence reactance (X2)	p.u	CPD	
Zero sequence reactance (X0)	p.u	CPD	
Stator leakage reactance (Xl)	p.u	CPD	
Short Circuit Ratio			
Open circuit and short circuit saturation curves and air gap line	graph	CPD	
TIME CONSTANTS			
Direct axis open circuit unsaturated transient time (T'do)	Secs	CPD	
Direct axis open circuit unsaturated sub-transient time (T"do)	Secs	CPD	
Quadrature axis open circuit unsaturated transient time (T'qo)	Secs	CPD	
Quadrature axis open circuit unsaturated transient time (T'qo)	Secs	CPD	
Quadrature axis open circuit unsaturated sub-transient time (T"qo)	Secs	CPD	
GENERATING UNIT STEP-UP TRANSFORMER			
Rated MVA	MVA	PPD	
Voltage Ratio			
Positive Sequence Reactance:			
Max Tap	% on MVA	CPD	
Min tap	% on MVA	CPD	
Nominal tap	% on MVA	CPD	
Positive Sequence Resistance:			
Max Tap	% on MVA	CPD	
Min tap	% on MVA	CPD	
Nominal tap	% on MVA	CPD	
Zero phase sequence reactance	% on MVA	CPD	
Tap change range	+% / -%	CPD	

DATA DESCRIPTION	UNITS	DATA CAT	VALUE
Tap change step size	%	CPD	
Tap changer type, on-load or off-circuit	On/Off	CPD	
EXCITATION:			
Exciter category, e.g. Rotating Exciter, or Static Exciter etc	Text	CPD	
Details of Excitation System (including PSS if fitted) described in block diagram form showing transfer functions of individual elements.	Diagram	CPD	
Details of Over-excitation Limiter described in block diagram form showing transfer functions of individual elements.	Diagram	CPD	
Details of Under-excitation Limiter described in block diagram form showing transfer functions of individual elements.	Diagram	CPD	
Where possible a PSSE representation should be provided which must include values for all relevant parameters	Programme Code	CPD	
GOVERNOR AND ASSOCIATED PRIME MOVER PARAMETERS			
Governor Block Diagram showing transfer function of individual elements including turbine (each stage), boiler and acceleration sensitive elements	Diagram	CPD	
Where possible a PSSE representation should be provided which must include values for all relevant parameters	Programme Code	CPD	
RESPONSE CAPABILITY			
Designed Minimum Operating Level	MW	OC3	
Primary Response values to –0.5Hz ramp frequency fall	MW	OC3	
Secondary Response values to –0.5Hz ramp frequency fall	MW	OC3	
High Frequency Response values to +0.5Hz ramp frequency rise	MW	OC3	

Note: p.u. means per unit on Generating Unit rating

Data Registration Code Schedule 2 - Generation Planning Parameters And Availability Data, Part 1: Generation Planning Parameters

Part 1 of this schedule contains the Dispatch Unit Generation Planning Parameters required by the Grid Owner and GSO to facilitate studies in Operational Planning timescales.

POWER STATION DATA:_____ DATE:_____

DATA DESCRIPTION	UNITS	DATA CAT	VALUE
GENERATING UNIT:			
OUTPUT CAPABILITY			
Registered Capacity	MW	RGD	
Minimum Generation	MW	RGD	
MW available from Generating Units in excess of Registered Capacity	MW	RGD	
REGIME UNAVAILABILITY			
These data blocks are provided to allow fixed periods of unavailability to be registered			
Earliest Synchronising time:			
Monday	hr/min	OC2	
Tuesday – Friday	hr/min	OC2	
Saturday – Sunday	hr/min	OC2	
Latest De-Synchronising time:			
Monday – Thursday	hr/min	OC2	
Friday	hr/min	OC2	
Saturday – Sunday	hr/min	OC2	
SYNCHRONISING PARAMETERS			
Notice to Synchronise (NTS) after 48 hour Shutdown	Mins	OC2	
Station Synchronising Intervals (SI) after 48 hour Shutdown	Mins	OC2	
Synchronising Generation (SYG) after 48 hour Shutdown	MW	OC2	
De-Synchronising Intervals (Single value)	Mins	OC2	
RUNNING AND SHUTDOWN PERIOD LIMITATIONS:			
Minimum on time (MOT) after 48 hour Shutdown	Mins	OC2	
Minimum Shutdown time (MST)	Mins	OC2	
Two Shifting Limit (max. per day)	No.	OC2	
RUN-UP/RUN-DOWN PARAMETERS			
Run-up rate after 48 hour shutdown from synchronisation of Generating Unit to Dispatched load level	MW/min	OC2	
Run-down rate from Generating Unit Dispatched load level to Desynchronisation	MW/min	OC2	
REGULATION PARAMETERS			
Spinning Reserve Level	MW	OC2	
Loading rate from Spinning Reserve Level to Registered Capacity	MW/min	OC2	
Deloading rate from Registered Capacity to Spinning Reserve Level	MW/min	OC2	
Regulating Range	MW	OC2	
Load rejection capability while still Synchronised and able to supply Load.	MW	OC2	

Data Registration Code Schedule 2 - Generation Planning Parameters And Generation Price Data, Part 2: Availability Data

Part 2 of this schedule contains the data required with respect to Dispatch Units to be supplied by Generator at 1000 hrs pursuant to SDC1. Many of these parameters are the same as those required in Part 1, but the data supplied under Part 1 will not be used for real time operation.

The following information is required daily by 1000 to cover the next following Availability Declaration Period with respect to each Dispatch Unit. Changes to any of this data should be notified to the Grid Owner, GSO and Single Buyer when they become known.

POWER STATION DATA:_____ DATE:_____

Availability Declaration

1. Dispatch Unit availability, (start time and date for each level of availability).

2. Dispatch Unit regime unavailability, (day, start time, end time).

3. Dispatch Unit initial conditions (time required for Notice to Synchronise).

4. Maximum Generation increase in output above Offered Availability.

Generation Scheduling and Dispatch Parameters

1. Dispatch Unit inflexibility (inflexibility description, start date and time, end date and time, MW. The inflexibility can only be a minimum MW level or an exact MW level).

2. Station Synchronising intervals (as specified in Part 1).

3. Station De-Synchronising Intervals.

4. Dispatch Unit Basic Data:

   (a) Minimum Generation;
   (b) Spinning Reserve Level;
   (c) Minimum Shutdown time;

5. Dispatch Unit Two Shifting Limit.

6. Dispatch Unit minimum on time (as specified in Part 1).

7. Dispatch Unit Synchronising Generation (as specified in Part 1).

8. Dispatch Unit Synchronising Groups.

9. Dispatch Unit run-up rates (as specified in Part 1).

10. Dispatch Unit run-up rate MW breakpoints.

11. Dispatch Unit run-down rates (as specified in Part 1).

12. Dispatch Unit loading rates when heated through (three rates with two MW breakpoints covering the range from Minimum Generation to Dispatch Unit Registered Capacity).

13. Centrally Dispatched Generating Unit (three rates with two MW).

14. Maximum Generation reduction in MVAr generation capability.

Data Registration Code Schedule 3 - Generating Plant Outage Programmes, Output Usable and Inflexibility Information.

DATA DESCRIPTION		UNITS	TIMESCALE COVERED	UPDATE TIME	DATA CAT.
GENERATION PLANNING FOR YEARS 1 TO 5 AHEAD					
GENERATION, DISTRIBUTION AND TRANSMISSION:					
GENERATING, DISTRIBUTION AND TRANSMISSION PLANT OUTAGE PROGRAMME	GENERATING PLANT OUTPUT USABLE				
Indicative outage programme comprising			Yrs 1 - 5	March	
duration		weeks	"	"	OC2
preferred start		date	"	"	OC2
earliest start		date	"	"	OC2
latest finish		date	"	"	OC2
	Weekly OU	MW	"	"	OC2
Provisional outage programme comprising:			Yr 1	July	
duration		weeks	"	"	OC2
preferred start		date	"	"	OC2
earliest start		date	"	"	OC2
latest finish		date	"	"	OC2
	Updated weekly OU	MW	"	"	OC2
Response of the GSO as detailed in OC2 for			Yr 1	June	OC2
Users' response to suggested changes of the GSO or update of potential outages			Yr 1	July	OC2
Agreement of final Generation Outage Programme			Yr 1	August	OC2
Formal issue of the Operational Plan by the GSO			Yr 1	August	OC2
TRANSMISSION SYSTEM PLANNING FOR YEARS 1 TO 5 AHEAD					
The GSO proposes Transmission System outage plan			Yrs 1 - 5	June	OC2
The GSO issues final Transmission System outage plan			Yrs 1 - 5	August	OC2
PLANNING FOR YEAR 0					
Final Transmission System outage plan becomes the outage plan for Year 0			Yr 0	September	OC2
Requests for changes by Users			Yr 0	7 weeks ahead	OC2
Agreement to requests for changes by the GSO			Yr 0	14 days from request	OC2
PROGRAMMING PHASE					
Preliminary Transmission System outage programme prepared by the GSO			Yr 0	8 weeks ahead	OC2
Firm Transmission System outage programme prepared by the GSO			Yr 0	1 week ahead	OC2
Day ahead Transmission System outage programme prepared by the GSO			Yr 0	Day ahead	OC2

Data Registration Code Schedule 4 - Embedded Generating Plant Output Forecasts

DATA DESCRIPTION	UNITS	TIMESCALE COVERED	UPDATE TIME	DATA CAT.
Station Name	Text			
Associated Grid Supply Point	Text			
Power Station output at the time of the annual peak Demand of the GSO	MW	For yrs 0 – 5 Weeks 1 - 52	June	OC1
Power Station daily output profile 48 x ½ hour (or block programme if applicable).	MW	Weeks 2 - 8 ahead	Weekly @ 10.00 Mon	OC1
As above	MW	Days 2 - 12 ahead	Weekly @ 12.00 Wed	OC1
As above	MW	Schedule Day ahead (3 days on Friday)	Daily @ 10.00	OC1
Changes to output profile or block programme supplied @ 1000	MW	Remainder of Scheduling period	As specified by GSO	OC1
Post-Control Phase:				
Half Hourly Active Power output	MW			
Half Hourly Reactive Power output	MVAr			

Data Registration Code Schedule 5 - Users System Data

The data in this Schedule 5 is required from Users who are connected to the Transmission System via a Grid Supply Point (or who are seeking such a connection)

DATA DESCRIPTION	UNITS	DATA CATEGORY
USERS SYSTEM LAYOUT:		
A Single Line Diagram showing all or part of the User's System is required. This diagram shall include:-		CPD
(a) all parts of the User's System, whether existing or proposed, operating at 66kV, 132kV, 275kV or 500kV,		
(b) all parts of the User's System operating at a voltage of 33kV or higher which can interconnect Connection Points, or split bus-bars at a single Connection Point,		
(c) all parts of the User's System between Embedded Generating Plant connected to the User's Subtransmission System and the relevant Connection Point,		
(d) all parts of the User's System at a site of the GSO.		
The Single Line Diagram may also include additional details of the User's Network, and the transformers connecting the User's Network to a lower voltage.		
This Single Line Diagram shall depict the arrangement(s) of all of the existing and proposed load current carrying Apparatus relating to both existing and proposed Connection Points, showing electrical circuitry (ie. overhead lines, underground cables, power transformers and similar equipment), operating voltages. In addition, for equipment operating at a Transmission Voltage, circuit breakers and phasing arrangements shall be shown.		
REACTIVE COMPENSATION		
For independently switched reactive compensation equipment not owned by the GSO connected to the User's System at 66kV and above other than power factor correction equipment associated with a customers Plant or Apparatus:		
Type of equipment (eg. fixed or variable)	Text	CPD
Capacitive rating; or	MVAr	CPD
Inductive rating; or	MVAr	CPD
Operating range	MVAr	CPD
Details of automatic control logic to enable operating characteristics to be determined	text and/or diagrams	CPD
Point of Connection to User's System (electrical location and system voltage)	Text	CPD
SUBSTATION INFRASTRUCTURE		
For the infrastructure associated with any User's equipment at a Substation owned, operated or managed by the GSO:		
Rated 3-phase rms short-circuit withstand current	kA	CPD
Rated 1-phase rms short-circuit withstand current	kA	CPD
Rated Duration of short-circuit withstand	s	CPD
Rated rms continuous current	A	CPD

Circuit Parameters

The data below is all Project Planning Data. Details are to be given for all circuits shown on the Single Line Diagram

Years Valid	Node 1	Node 2	Rated Voltage kV	Operating Voltage kV	Positive Phase Sequence % on 100 MVA			Zero Phase Sequence (self) % on 100 MVA			Zero Phase Sequence (mutual) % on 100 MVA		
					R	X	B	R	X	B	R	X	B

Notes

1. Data should be supplied for the current, and each of the five succeeding Years. This should be done by showing for which years the data is valid in the first column of the Table.

Transformer Data

The data below is all Project Planning Data, and details should be shown below of all transformers shown on the Single Line Diagram. Details of Winding Arrangement, Tap Changer and earthing details are only required for transformers connecting the User's higher voltage system with its Primary Voltage System.

Years valid	Name of Node or Connection Point	Trans-former	Rating MVA	Voltage Ratio		Positive Phase Sequence Reactance % on Rating			Positive Phase Sequence Resistance % on Rating			Zero Sequence Reactance % on Rating	Winding Arr.	Tap Changer			Earthing Details (delete as app.) *
				HV	LV	Max. Tap	Min. Tap	Nom. Tap	Max. Tap	Min. Tap	Nom. Tap			range +% to -%	step size %	type (delete as app.)	
																ON/OFF	Direct/Res/Rea
																ON/OFF	Direct/Res/Rea
																ON/OFF	Direct/Res/Rea
																ON/OFF	Direct/Res/Rea
																ON/OFF	Direct/Res/Rea
																ON/OFF	Direct/Res/Rea
																ON/OFF	Direct/Res/Rea

*If Resistance or Reactance please give impedance value

Notes

1. Data should be supplied for the current, and each of the five succeeding Years. This should be done by showing for which years the data is valid in the first column of the Table
2. For a transformer with two secondary windings, the positive and zero phase sequence leakage impedances between the HV and LV1, HV and LV2, and LV1 and LV2 windings are required.

Switchgear Data

The data below is all Committed Project Data d for all switchgear (ie. circuit breakers, load disconnectors and disconnectors) operating at a Tranmission Voltage. In addition, data should be provided for all circuit breakers irrespective of voltage located at a Connection Site which is owned, operated or managed by the GSO.

Years Valid	Connection Point	Switch No.	Rated Voltage kV rms	Operating Voltage kV rms	Rated short-circuit breaking current		Rated short-circuit peak making current		Rated rms continuous current (A)	DC time constant at testing of asymmetrical breaking ability(s)
					3 Phase kA rms	1 Phase kA rms	3 Phase kA peak	1 Phase kA peak		

Notes

1. Rated Voltage should be as defined by IEC 694.
2. Data should be supplied for the current, and each of the five succeeding Years. This should be done by showing for which years the data is valid in the first column of the Table

DATA DESCRIPTION	UNITS	DATA CATEGORY
PROTECTION SYSTEMS		
The following information relates only to Protection equipment which can trip or inter-trip or close any Connection Point circuit breaker or any circuit breaker of the Grid Owner and GSO. The information need only be supplied once and need not be supplied on a routine annual thereafter, although the GSO should be notified if any of the information changes.		
(a) A full description, including estimated settings, for all relays and Protection systems installed or to be installed on the User's System;		CPD
(b) A full description of any auto-reclose facilities installed or to be installed on the User's System, including type and time delays;		CPD
(c) A full description, including estimated settings, for all relays and Protection systems installed or to be installed on the Generating Unit's generator transformer, unit transformer, station transformer and their associated connections;		CPD
(d) For Generating Units having a circuit breaker at the generator terminal voltage clearance times for electrical faults within the Generating Unit zone must be declared.		CPD
(e) Fault Clearance Times: Most probable fault clearance time for electrical faults on any part of the User's System directly connected to the Transmission System.	mSec	CPD

USER'S SYSTEM DATA (CPD)

Information for Transient Overvoltage Assessment

The information listed below may be requested by the Grid Owner or GSO from each User with respect to any Connection Site between that User and the Grid Owner or GSO. The impact of any third party Embedded within the User's System should be reflected.

(a) Busbar layout plan(s), including dimensions and geometry showing positioning of any current and voltage transformers, through bushings, support insulators, disconnectors, circuit breakers, surge arresters, etc. Electrical parameters of any associated current and voltage transformers, stray capacitances of wall bushings and support insulators, and grading capacitances of circuit breakers;

(b) Electrical parameters and physical construction details of lines and cables connected at that busbar. Electrical parameters of all plant e.g., transformers (including neutral earthing impedance or zig-zag transformers if any), series reactors and shunt compensation equipment connected at that busbar (or to the tertiary of a transformer) or by lines or cables to that busbar;

(c) Basic insulation levels (BIL) of all Apparatus connected directly, by lines or by cables to the busbar;

(d) Characteristics of overvoltage Protection devices at the busbar and at the termination points of all lines, and all cables connected to the busbar;

(e) Fault levels at the lower voltage terminals of each transformer connected directly or indirectly to the Transmission System without intermediate transformation;

(f) The following data is required on all transformers operating at Transmission Voltage: three or five limb cores or single phase units to be specified, and operating peak flux density at nominal voltage.

(g) An indication of which items of equipment may be out of service simultaneously during Planned Outage conditions.

Harmonic Studies (CPD)

The information given below, both current and forecast, where not already supplied in this Schedule 5 may be requested by the Grid Owner from each User if it is necessary for the Grid Owner or GSO to evaluate the production/magnification of harmonic distortion on systems of Users and the Grid Owner or GSO. The impact of any third party Embedded within the User's System should be reflected:

(a) Overhead lines and underground cable circuits of the User's Subtransmission System must be differentiated and the following data provided separately for each type:
Positive phase sequence resistance
Positive phase sequence reactance
Positive phase sequence susceptance

(b) for all transformers connecting the User's Subtransmission System to a lower voltage:
Rated MVA
Voltage Ratio
Positive phase sequence resistance
Positive phase sequence reactance

(c) at the lower voltage points of those connecting transformers:
Equivalent positive phase sequence susceptance
Connection voltage and MVAr rating of any capacitor bank and component design parameters if configured as a filter
Equivalent positive phase sequence interconnection impedance with other lower voltage points
The Minimum and maximum Demand (both MW and MVAr) that could occur
Harmonic current injection sources in Amps at the Connection voltage points
Details of traction loads, eg connection phase pairs, continuous variation with time, etc.

(d) an indication of which items of equipment may be out of service simultaneously during Planned Outage conditions

Voltage Assessment Studies (CPD)

The information listed below, where not already supplied in this Schedule 5, may be requested by the Grid Owner or GSO from each User with respect to any Connection Site if it is necessary for the Grid Owner or GSO to undertake detailed voltage assessment studies (eg to examine potential voltage instability, voltage control co-ordination or to calculate voltage step changes). The impact of any third party Embedded within the Users System should be reflected:-

(a) For all circuits of the User's Subtransmission System:-

Positive Phase Sequence Reactance
Positive Phase Sequence Resistance
Positive Phase Sequence Susceptance
MVAr rating of any reactive compensation equipment

(b) for all transformers connecting the User's Subtransmission System to a lower voltage:-

Rated MVA
Voltage Ratio
Positive phase sequence resistance
Positive Phase sequence reactance
Tap-changer range
Number of tap steps
Tap-changer type: on-load or off-circuit
AVC/tap-changer time delay to first tap movement
AVC/tap-changer inter-tap time delay

(c) at the lower voltage points of those connecting transformers:-

Equivalent positive phase sequence susceptance
MVAr rating of any reactive compensation equipment
Equivalent positive phase sequence interconnection impedance with other lower voltage points
The maximum Demand (both MW and MVAr) that could occur
Estimate of voltage insensitive (constant power) load content in % of total load at both winter peak and 75% off-peak load conditions

Short Circuit Analyses:(CPD)

The information listed below, both current and forecast, and where not already supplied under this Schedule 5, may be requested by the Grid Owner or GSO from each User with respect to any Connection Site where prospective short-circuit currents on equipment owned, operated or managed by the Grid Owner or GSO are close to the equipment rating. The impact of any third party Embedded within the User's System should be reflected:

(a)For all circuits of the User's Subtransmission System:
Positive phase sequence resistance
Positive phase sequence reactance
Positive phase sequence susceptance
Zero phase sequence resistance (both self and mutuals)
Zero phase sequence reactance (both self and mutuals)
Zero phase sequence susceptance (both self and mutuals)

(b) for all transformers connecting the User's Subtransmission System to a lower voltage:
Rated MVA
Voltage Ratio
Positive phase sequence resistance (at max, min and nominal tap)
Positive Phase sequence reactance (at max, min and nominal tap)
Zero phase sequence reactance (at nominal tap)
Tap changer range
Earthing method: direct, resistance or reactance
Impedance if not directly earthed

(c) at the lower voltage points of those connecting transformers:
The maximum Demand (in MW and MVAr) that could occur
Short-circuit infeed data in accordance with PC.A.2.5.4(a) unless the User's lower voltage network runs in parallel with the Subtransmission System, when to prevent double counting in each node

infeed data, a π equivalent comprising the data items of PC.A.2.5.4(a) for each node together with the positive phase sequence interconnection impedance between the nodes shall be submitted.

Data Registration Code Schedule 6 - Users Outage Information

DATA DESCRIPTION	UNITS	TIMESCALE COVERED	UPDATE TIME	DATA CAT.
TRANSMISSION SYSTEM PLANNING FOR YEARS 1 TO 5 AHEAD				
Details are required from Network Operators of proposed outages in their User Systems and from Generators with respect to their outages, which may affect the performance of the Total System (eg. at a Connection Point or constraining Embedded Generating Plant)		Years 1 - 5	March	OC2
GSO advises Network Operators of outages affecting their Systems		Years 1 - 2	June	OC2
GSO issues final Transmission System outage plan with advice of operational effects on Users System		Years 1 - 2	July	OC2
PLANNING FOR YEAR 0				
Requests for changes by Users		Yr 0	7 weeks ahead	OC2
Agreement to requests for changes by GSO		Yr 0	14 days from request	OC2
PROGRAMMING PHASE				
Preliminary Transmission System outage programme prepared by GSO		Yr 0	8 weeks ahead	OC2
Provisional Transmission System outage programme prepared by GSO		Yr 0	1 week ahead	OC2
Final Transmission System outage programme prepared by GSO		Yr 0	Day ahead	OC2

Data Registration Code Schedule 7 - Load Characteristics

DATA DESCRIPTION	UNITS	DATA FOR FUTURE YEARS				
		Yr 1	Yr 2	Yr 3	Yr 4	Yr 5
FOR ALL TYPES OF DEMAND FOR EACH GRID SUPPLY POINT						
The following information is required infrequently and should only be supplied, wherever possible, when requested by the Grid Owner and GSO:						
Details of individual loads which have Characteristics significantly different from the typical range of domestic or commercial and industrial load supplied		Please attach				
Sensitivity of demand to fluctuations in voltage and frequency on Transmission System at time of peak Connection Point Demand (Active and Reactive Power):						
Voltage Sensitivity	MW/kV MVAr/kV					
Frequency Sensitivity	MW/Hz MVAr/HZ					
Reactive Power sensitivity should relate to the Power Factor information given in Schedule 11 (or for Generating Units, Schedule 1)						
Phase unbalance imposed on the Transmission System						
- maximum	%					
- average	%					
Maximum Harmonic Content imposed on the Transmission System	%					
Details of any loads which may cause Demand Fluctuations greater than those permitted under Engineering Recommendation P28, Stage 1 at the Point of Common Coupling including Flicker Severity (Short Term) and Flicker Severity (Long Term)						

Data Registration Code Schedule 8 - Power Transfers From Externally Interconnected Parties to Single Buyer and GSO

INTERCONNECTED PARTY DATA:_____ DATE:_____

Daily Availability Declaration

Time of Day (hrs)	MWh at Delivery Point			To/From
	Price A	Price B	Price C	
00.00 – 00.59				
01.00 – 01.59				
02.00 – 02.59				
03.00 – 03.59				
04.00 – 04.59				
05.00 – 05.59				
06.00 – 06.59				
07.00 – 07.59				
08.00 – 08.59				
09.00 – 09.59				
10.00 – 10.59				
11.00 – 11.59				
12.00 – 12.59				
13.00 – 13.59				
14.00 – 14.59				
15.00 – 15.59				
16.00 – 16.59				
17.00 – 17.59				
18.00 – 18.59				
19.00 – 19.59				
20.00 – 20.59				
21.00 – 21.59				
22.00 – 22.59				
23.00 – 23.59				

Confirmation of Purchase (in MWh)

Time of Day (hrs)	Obligated Energy	Rescheduled Obligated Energy	Commercial Energy			To/From	Remark
			Price A	Price B	Price C		
00.00 – 00.59							
01.00 – 01.59							
02.00 – 02.59							
03.00 – 03.59							
04.00 – 04.59							
05.00 – 05.59							
06.00 – 06.59							
07.00 – 07.59							
08.00 – 08.59							
09.00 – 09.59							
10.00 – 10.59							
11.00 – 11.59							
12.00 – 12.59							
13.00 – 13.59							
14.00 – 14.59							
15.00 – 15.59							
16.00 – 16.59							
17.00 – 17.59							
18.00 – 18.59							
19.00 – 19.59							
20.00 – 20.59							
21.00 – 21.59							
22.00 – 22.59							
23.00 – 23.59							

Data Registration Code Schedule 9 - Data Supplied By the Grid Owner and GSO to Users

(Example of data to be supplied)

CODE	DESCRIPTION
CC	Operation Diagram
CC	Site Responsibility Schedules
PC	Day of System Peak Demand
	Day of the System Minimum Demand
OC2	Generating Plant Demand Margins and OU requirements for each Generator over varying timescales
	Equivalent networks to Users for Outage Planning
SDC1	Generation Schedule, input controls, relevant input and output data and special actions
SDC2	Re-optimisation of data supplied under SDC1, above
SDC3	Location, amount, and Low Frequency Relay settings of any Low Frequency Relay initiated Demand Reduction for Demand which is Embedded.

Data Registration Code Schedule 10 - User's Demand Profiles and Active Energy Data

DATA DESCRIPTION	Yr 0	Yr 1	Yr 2	Yr 3	Yr 4	Yr 5	UPDATE TIME	DATA CAT
DEMAND PROFILES								
Total User's system profile (please delete as applicable)	Day of User's annual Maximum Demand (MW) Day of annual peak of Total System Demand (MW) Day of annual minimum Total System Demand (MW)							
0000 – 0030							July	CPD
0030 – 0100							"	and
0100 – 0130							"	OC1
0130 – 0200							"	"
0200 – 0230							"	"
0230 – 0300							"	"
0300 – 0330							"	"
0330 – 0400							"	"
0400 – 0430							"	"
0430 – 0500							"	"
0500 – 0530							"	"
0530 – 0600							"	"
0600 – 0630							"	"
0630 – 0700							"	"
0700 – 0730							"	"
0730 – 0800							"	"
0800 – 0830							"	"
0830 – 0900							"	"
0900 – 0930							"	"
0930 – 1000							"	"
1000 – 1030							"	"
1030 – 1100							"	"
1100 – 1130							"	"
1130 : 1200							"	"
1200 : 1230							"	"
1230 : 1300							"	"
1300 : 1330							"	"
1330 : 1400							"	"
1400 : 1430							"	"
1430 : 1500							"	"
1500 : 1530							"	"
1530 : 1600							"	"
1600 : 1630							"	"
1630 : 1700							"	"
1700 : 1730							"	"
1730 : 1800							"	"
1800 : 1830							"	"
1830 : 1900							"	"
1900 : 1930							"	"
1930 : 2000							"	"
2000 : 2030							"	"
2030 : 2100							"	"
2100 : 2130							"	"
2130 : 2200							"	"
2200 : 2230							"	"
2230 : 2300							"	"
2300 : 2330							"	"
2330 : 0000							"	"
							"	"

DATA DESCRIPTION	Out-turn Actual	Out-turn Weather correction	Yr 0	Yr 1.	Yr 2	Yr 3	Yr 4	Yr 5
Active Energy Data Total annual Active Energy requirements under average conditions of each User in the following categories:- Domestic Farms Commercial Industrial Traction Lighting User System Losses Off-Peak:- Domestic Commercial								

NOTES:

1. Yr means the Year

2. Demand and Active Energy Data (General)

   Demand and Active Energy data should relate to the point of connection to the Transmission System and should be net of the output (as reasonably considered appropriate by the User) of all Embedded Generating Plant. Auxiliary demand of Embedded Power Stations should be included in the demand data submitted by the User at the Connection Point. Users should refer to the PC for a full definition of the Demand to be included.

3. Demand profiles and Active Energy data should be for the Total System of the Network Operator, including all Connection Points. Demand Profiles should give the numerical maximum demand that in the User's opinion could reasonably be imposed on the Transmission System.

4. In addition the Demand profile is to be supplied for such days as the B may specify, but such a request is not to be made more than once per year.

Data Registration Code Schedule 11 - Connection Point Data

The following information is required from each Network Operator, Distributor and each Directly Connected Customer. The data should be provided by the end of July each year.

DATA DESCRIPTION	Yr 0	Yr 1	Yr 2	Yr 3	Yr 4	Yr 5	UPDATE TIME	DATA CAT
SPECIFIC HALF HOUR DEMANDS AND POWER FACTORS (see Notes 2, 3 and 5)								
Individual Connection Point Demands and Power Factor at : (name of GSP)								
The annual peak half Hour at the Connection Point (MW/p.f.)							March	CPD
Lumped Susceptance (See Note 6)							March	CPD
Deduction made for Independent and Customer Generating Plant (MW)							March	CPD
The specified time of the annual peak half hour of Total System Demand (MW/p.f.)							March	CPD
Deduction made for Independent and Customer Generating Plant (MW)							March	CPD
The specified time of the annual minimum half hour of the Total System Demand (MW/p.f.)							March	CPD
Deduction made for Embedded Generating Plant (MW)							March	CPD
For such other times as the Single Buyer , Grid Owner and GSO may specify (MW/p.f.)							March	CPD
Deduction made for Embedded Generating Plant (MW)							March	CPD
DEMAND TRANSFER CAPABILITY (PRIMARY SYSTEM)								
Where a User's Demand, may be fed from alternative Connection Point(s) the following information should be provided								
First circuit outage (fault outage) condition								
Name of the alternative Connection Point(s)							March	CPD
Demand transferred (MW)							March	CPD
Demand transferred (MVAr)							March	CPD

DATA DESCRIPTION	Yr 0	Yr 1	Yr 2	Yr 3	Yr 4	Yr 5	UPDATE TIME	DATA CAT
Transfer arrangement, i.e Manual (M) Interconnection (I) Automatic (A)							March	CPD
Time to effect transfer (hrs)							March	CPD
Second Circuit outage (planned outage) condition								
Name of the alternative Connection Point(s)							March	CPD
Demand transferred (MW)							March	CPD
Demand transferred (MVAr)							March	CPD
Transfer arrangement, i.e Manual (M) Interconnection (I) Automatic (A)							March	CPD
Time to effect transfer (hrs)							March	CPD
INDEPENDENT AND CUSTOMER GENERATION SUMMARY								
For each Connection Point where there are Embedded Generating Stations the following information is required:								
No. of Embedded Power Stations							March	CPD
Number of Generating Units within these stations							March	CPD
Summated Capacity of all these Generating Units							March	CPD
Where the Network Operator's System places a constraint on the capacity of an Embedded Centrally Dispatched Generating Unit:								
Station Name							March	CPD
Generating Unit							March	CPD
System Constrained Capacity		March					March	CPD

NOTES:

1. 'Yr' means Year. Yr 0 refers to the current Year.

2. Demand Data (General)

   All Demand data should be net of the output (as reasonably considered appropriate by the User) of all Embedded Generating Plant. Auxiliary demand of Embedded Power Stations should not be included in the demand data submitted by the User. Users should refer to the PC for a full definition of the Demand to be included.

3. Peak Demands should relate to each Connection Point individually and should give the maximum demand that in the User's opinion could reasonably be imposed on the Transmission System. Where the busbars on a Connection Point are expected to be run in separate sections separate Demand data should be supplied for each such section of busbar.

   In deriving Demands any deduction made by the User (as detailed in note 2 above) to allow for Embedded Generating Plant is to be specifically stated as indicated on the Schedule.

4. The GSO may at its discretion require details of any Embedded Generating Plant whose output can be expected to vary in a random manner (eg. wind power) or according to some other pattern (eg. tidal power).

5. Where more than 95% of the total Demand at a Connection Point is taken by synchronous motors, values of the Power Factor at maximum and minimum continuous excitation may be given instead.

6. Power Factor data should allow for series reactive losses on the User's System but exclude reactive compensation specified separately in Schedule 5, and any network susceptance provided under Schedule 11.

Data Registration Code Schedule 12 - Demand Control Data

The following information is required from each Directly Connected Customer, Network Operator, and Distributor.

DATA DESCRIPTION	UNITS	TIMESCALE COVERED	UPDATE TIME	DATA CAT.
Demand Control				
Demand met or to be relieved by Demand Control (averaging 12MW or more over a half hour) at each Connection Point.				
Demand Control at time of Transmission System weekly peak demand				
Amount	MW	Yrs 0 - 5	March	OC1
Duration	Min	Yrs 0 - 5	March	OC1
For each half hour	MW	Wks 2-8 ahead	1000 Mon	OC1
For each half hour	MW	Days 2-12 ahead	1200 Wed	OC1
Customer Demand Management (of 12MW or more at the Connection Point)				
For each half hour	MW	Schedule Day 1 ahead Days 1-3 on Friday (More at holidays)	1000 hrs Daily	OC4
For each half hour	MW	Remainder of scheduling period	When changes occur to previous plan	OC4
Demand Control Offered as Reserve				
Magnitude of Demand which is tripped	MW	Year ahead from September	March	OC3
System Frequency at which tripping is initiated	Hz	"	"	"
Time duration of System Frequency below trip setting for tripping to be initiated	Sec	"	"	"
Time delay from trip initiation to Tripping	Sec	"	"	"
Emergency Manual Load Disconnection				
Method of achieving load disconnection	Text	Year ahead from September	March	OC3
Annual Peak Demand (Active Power) at Connection Point (requested under Schedule 11 - repeated here for reference)	MW	"	"	"
Cumulative percentage of Connection Point Demand (Active Power) which can be disconnected by the following times from an instruction from the GSO				
5 mins	%	"	"	OC4
10 mins	%	"	"	"
15 mins	%	"	"	"

DATA DESCRIPTION	UNITS	TIMESCALE COVERED	UPDATE TIME	DATA CAT.
20 mins	%	"	"	"
25 mins	%	"	"	"
30 mins	%	"	"	"
Automatic Low Frequency Disconnection				
Magnitude of Demand disconnected, and frequency at which Disconnection is initiated, for each frequency setting for each Grid Supply Point	MW Hz	Year ahead from September	March	OC3

(Check times)

Data Registration Code Schedule 13 - Fault Infeed Data From Users

The data in this Schedule 13 is all Registered Data, and is required from all Users, other than Generators, who are connected to the Transmission System via a Connection Point (or who are seeking such a connection). A data submission is to be made each year by the end of March. A separate submission is required for each node included in the Single Line Diagram provided in Schedule 5.

DATA DESCRIPTION	UNITS		DATA FOR FUTURE YEARS				
		Yr 0	Yr 1	Yr 2	Yr 3	Yr 4	Yr 5
SHORT CIRCUIT INFEED TO TRANSMISSION SYSTEM FROM USERS SYSTEM AT A CONNECTION POINT							
Name of node or Connection Point							
Symmetrical three phase short-circuit current infeed							
- at instant of fault	kA						
- after subtransient fault current contribution has substantially decayed	kA						
Zero sequence source impedances as seen from the Point of Connection or node on the Single Line Diagram (as appropriate) consistent with the maximum infeed above:							
- Resistance	% on 100 MVA						
- Reactance	% on 100 MVA						
Positive sequence X/R ratio at instance of fault							
Pre-Fault voltage magnitude at which the maximum fault currents were calculated	p.u.						
Negative sequence impedances of User's System as seen from the Point of Connection or node on the Single Line Diagram (as appropriate). If no data is given, it will be assumed that they are equal to the positive sequence values.							
- Resistance	% on 100 MVA						
- Reactance	% on 100 MVA						

Data Registration Code Schedule 14 - Fault Infeed Data

The data in this Schedule 14 is all Registered Data, and is required from all Generators, whether directly connected or Embedded. A data submission is to be made each year by the end of March.

Fault infeeds via Unit Transformers

A submission should be made for each Generating Unit with an associated Unit Transformer. Where there is more than one Unit Transformer associated with a Generating Unit, a value for the total infeed through all Unit Transformers should be provided. The infeed through the Unit Transformer(s) should include contributions from all motors normally connected to the Unit Board, together with any generation (eg Auxiliary Gas Turbines) which would normally be connected to the Unit Board, and should be expressed as a fault current at the Generating Unit terminals for a fault at that location.

DATA DESCRIPTION	UNITS		DATA FOR FUTURE YEARS				
		Yr 0	Yr 1	Yr 2	Yr 3	Yr 4	Yr 5
Name of Power Station							
Number of Unit Transformer							
Symmetrical three phase short- circuit current infeed through the Unit Transformers(s) for a fault at the Generating Unit terminals:							
- at instant of fault	kA						
- after subtransient fault current contribution has substantially decayed	kA						
Positive sequence X/R ratio at instance of fault							
Subtransient time constant (if significantly different from 40ms)	ms						
Pre-fault voltage at fault point (if different from 1.0 p.u.)							
The following data items need only be supplied if the Generating Unit Step-up Transformer can supply zero sequence current from the Generating Unit side to the Transmission System							
Zero sequence source impedances as seen from the Generating Unit terminals consistent with the maximum infeed above:							
- Resistance	% on 100 MVA						
- Reactance	% on 100 MVA						

Fault infeeds via Station Transformers

A submission is required for each Station Transformer directly connected to the Transmission System. The submission should represent normal operating conditions when maximum Generating Plant is Synchronised to the Transmission System, and should include the fault current from all motors normally connected to the Station Board, together with any Generation (eg Auxiliary Gas Turbines) which would normally be connected to the Station Board. The fault infeed should be expressed as a fault current at the HV terminals of the Station Transformer for a fault at that location.

If the submission for normal operating conditions does not represent the worst case, then a separate submission representing the maximum fault infeed that could occur in practice should be made.

DATA DESCRIPTION	UNITS		DATA FOR FUTURE YEARS				
		Yr 0	Yr 1	Yr 2	Yr 3	Yr 4	Yr 5
Name of Power Station							
Number of Station Transformer							
Symmetrical three phase short- circuit current infeed for a fault at the connection point:							
- at instant of fault	kA						
- after subtransient fault current contribution has substantially decayed	kA						
Positive sequence X/R ratio at instance of fault							
Subtransient time constant (if significantly different from 40ms)	ms						
Pre-fault voltage at fault point (if different from 1.0 p.u.)							
The following data items need only be supplied if the Generating Unit Step-up Transformer can supply zero sequence current from the Generating Unit side to the Transmission System							
Zero sequence source impedances as seen from the Point of Connection consistent with the maximum Infeed above:							
- Resistance	% on 100 MVA						
- Reactance	% on 100 MVA						

Note: The pre-fault voltage provided above should represent the voltage within the range 0.95 to 1.05 that gives the highest fault current

<End of Data Registration Code – Schedules 1 - 14>

Part IX: Metering Code

MC1 Introduction

MC1.1 The Metering Code sets out the metering requirements relating to Active Power, Reactive Power and Active Energy and Reactive Energy for all Users connected to or seeking connection to the Transmission System.

MC2 Objectives

MC2.1 The objective of the Metering Code (MC) is to ensure that all the technical requirements relating to metering Active and Reactive Power and Active Energy and Reactive Energy for all Users enabling the Single Buyer in respect of revenue metering and GSO in respect of operational metering, and the Users to comply with statutory and Licence obligations. The Code includes the installation and maintenance of metering equipment, collection of Metering Data for Billing, testing requirements for Meters and Metering Installations, security of and access to Metering Data, and requirements of the Metering Register.

MC2.2 As part of its objectives the Metering Code includes:

(a) details of the minimum requirements for the measurement and recording of electrical quantities required by Revenue Metering that will be used for settling electricity contracts and Operational Metering that will be used in operating the Grid System;

(b) to set out the provisions relating to the procurement, installation, testing, maintenance, and operation of Metering Installations including the associated Plant and Apparatus and communication links, for the measurement of electrical Active and Reactive Power and Active Energy and Reactive Energy and the provision of data for the commercial operation of the Grid System;

(c) to define the accuracy requirements and the parameters to be measured.

MC2.3 The Metering Code recognises the evolving metering technologies and processes as they become available and does not preclude application of such technologies provided that such applications is effected in

consultation between the GSO, the Single Buyer and the User, in accordance with the provisions of the Metering Code and without causing unacceptable effects by its connection to the Grid System. In this respect unacceptable effects are all effects which cause the Single Buyer and GSO as well as any User to violate the Licence Standards and to become non-compliant with this Grid Code, statutory and Licence obligations.

MC3 Scope

MC3.1 The MC applies to the GSO, the Single Buyer and to Users, which in this MC means:

(a) Generators;
(b) Distributors
(b) Network Operators;
(c) Directly Connected Customers;
(d) Users seeking connection to Transmission System or to a User System;
(e) Externally Interconnected Parties; and
(f) TNB Transmission.

MC4 Requirements

MC4.1 General

MC4.1.1 Revenue Metering shall be installed to measure Active Energy and Reactive Energy and Active Power and Reactive Power at Connection Points and the nett output of each Generating Unit on the Transmission System. This shall comprise both Import and Export metering as required by the Single Buyer and specified in the relevant Agreement.

MC4.1.2 The Revenue Metering shall be located as close as practicable to the Connection Point. Wherever there is a material difference between the Metering Installation location and the Connection Point an adjustment for the differences between the two locations will be calculated by the Single Buyer in Agreement with the User. The Metering Installation shall be capable of being interrogated both locally and remotely.

MC4.1.3 The Revenue Metering Data for Active Energy and Reactive Energy and Active Power and Reactive Power shall be recorded, stored at data

registers on-site every thirty (30) minutes and automatically collected once a day by the Data Collection System of the Single Buyer. The on-site electronic data registers shall have the capability to communicate with the Automatic Data Collection System and adequate capacity to store at least forty five (45) days of on-site data to provide back-up for any interruptions to the Automatic Data Collection System.

MC4.1.4 The Revenue Metering shall be the primary source of data for Billing purposes. Revenue Metering shall comprise of a Main Meter to measure and record the required data and a Check Meter to validate the readings from the Main Meter as back-up metering at all Connection Points.

MC4.1.5 The Revenue Metering Data collected by the Automatic Data Collection System is required for Billing purposes by the Single Buyer.

MC4.1.6 Operational Metering shall be installed to measure voltage, current, frequency, Active and Reactive Power, and accept signals relating to plant status indications and alarms for monitoring the circuits connecting the Generating Unit to the Transmission System. The Operational Metering Data shall be collected by the Remote Terminal Units (RTUs) which are part of the GSO's SCADA system as described in Connection Code CC6.6.3.

MC4.1.7 Operational Metering shall be installed where reasonably required by the GSO after consultation with the User so as to provide measurements and status indications at points reasonably determined by the GSO. Operational Metering shall be installed so as it will not adversely affect plant and the Grid System performance. Installation of Operational Metering shall be undertaken by the User, as soon as practicable following the request of the GSO and shall be subject to appropriate testing on a joint basis with the User to ensure its functioning in the required manner for system control purposes. Users shall maintain the Operational Metering equipment.

MC4.1.8 The Single Buyer shall develop a Revenue Metering Code of Practice in consultation with the GSO and the Users within two (2) years of the effective date of this Grid Code.

MC4.1.9 This Metering Code does not address the requirements, both technical and administrative, of the data adjustment and other functions within the Billing System or the requirements of the Billing System.

MC4.2 Key Principles

MC4.2.1 The key principles for application of metering in this Metering Code are as follows:

(a) each Connection Point of a User shall have a Metering Installation;

(b) each Connection Point to an External Interconnection shall have a Metering Installation;

(c) each Metering Installation shall consist of but shall not be limited to the following:

(i) Meters and associated Data Loggers;

(ii) current transformers (CT) and voltage transformers (VT);

(iii) secure protected wiring from current and voltage transformers to the Meters;

(iv) panel on which the Meters and associated Data Loggers are mounted;

(v) communication and communication interface equipment;

(vi) Metering accessories (for example, but not limited to, metering fuses, test blocks)

(vii) secure auxiliary supplies to Meters and other equipment;

(viii) monitoring and alarm equipment; and

(ix) facility to keep the installation secure, clean and dry;

as agreed between the GSO and the Single Buyer as the case may be and the User in the relevant Agreement.

(d) the accuracy of the Metering Installation and the parameters to be measured at each Connection Point shall be determined as indicated in Appendix 1;

(e) The person as nominated under the relevant Agreements shall have the responsibility for the provision of Metering Installations and spares as may be required, for Connection Points directly connected to the Transmission System;

(f) All costs of the Metering Installation are covered as per the relevant Agreement;

(g) The party responsible for the Metering Installation is the Single Buyer;

(h) The Single Buyer shall:

(i) ensure that the Revenue Metering Installations and Check Meter Installations are provided, installed and maintained in accordance with Appendix 1;

(ii) ensure that the components, accuracy and testing of each of the Metering Installations complies with the requirements of this Metering Code;

(iii) where one of the Metering Installations is described as a Type 1 Metering Installation in Appendix 1 arrange for the provision of an alarm monitoring feature to cover any failure of any critical components of the Metering Installation including the reduction of voltage input and loss of auxiliary supplies;

(iv) coordinate the electronic accessibility of each Metering Installation in a manner as to prevent congestion during Metering Data collection.

(i) Metering Installations shall comply with this Metering Code and shall be:

(i) physically secure and protected from tampering;

(ii) registered with the Single Buyer;

(iii) capable of providing Metering Data for electronic transfer to the Metering Database of the Single Buyer;

(j) Energy Data shall be based on units of kilowatt-hours (kWh) (Active Energy) and kilovar-hours (kVArh) (Reactive Energy) and shall be collated at each Billing Period by the Single Buyer and validated in accordance with standard procedure according to the relevant Agreement;

(k) wherever required and installed in accordance with this Metering Code, Check Meters shall be used to provide Metering Data whenever the Main Metering fails;

(l) each Network Operator and User with a User System shall be entitled to receive Metering Data as recorded by the Single Buyer in respect of the Metering Points on their network or system;

(m) historical data shall be maintained in the Metering Database for;

(i) six (6) months on-line;

(ii) thirteen (13) months in accessible format; and

(iii) seven (7) years in archive;

(n) The Single Buyer shall be responsible for auditing Revenue Metering Installations including both Main Meter and Check Meter facilities and shall be accountable for the accuracy and reliability of the Metering infrastructure and for reporting the performance of the Metering system;

(o) The Single Buyer shall establish a registration process and a Metering Register to facilitate the application of this Metering Code to Users in respect of:

(i) new Metering Installations;

(ii) Modifications to existing Metering Installations; and

(iii) decommissioning of Metering Installations,

including the provision of information on matters such as application process, timing, relevant parties, fees and Metering Installation details;

(p) In relation to the provisions of this Metering Code, non-compliance will be dealt with by using the Derogation Procedure set out in the General Conditions GC8 of the Grid Code.

MC5 Ownership

MC5.1 The person nominated under the relevant Agreement shall design, supply, install and test the Revenue Metering Installation at that Connection Point.

MC5.2 If the Single Buyer does not own the premises where the Metering Installation is located, then the owner of that premises will provide:

(a) 24-hour access and adequate space for the Metering and associated communications equipment;

(b) reliable auxiliary power supplies; and

(c) current transformers (CT) and voltage transformers (VT) compliant with this Metering Code and as agreed by the Single Buyer.

MC5.3 In relation to a connection between the Transmission System and a User System the Single Buyer shall own the Revenue Metering Installation.

MC6 Metering Accuracy and Data Exchange

MC6.1 Metering Accuracy and Availability

MC6.1.1 Each Metering Installation shall be capable of separately measuring the metered quantities in each direction where bi-directional Active Power and Reactive Power flows are possible.

MC6.1.2 The class of Metering Installation and the accuracy requirements thereof that must be installed at a specific Connection Point shall be determined in accordance with Appendix 1.

MC6.1.3 A Check Metering Installation is required to have the same degree of accuracy as the Revenue Metering Installation.

MC6.1.4 The target availability of measurement transformers and Metering Installations shall be 99% per annum and the target availability of the

communication link shall be 95% per annum unless otherwise agreed between the Single Buyer and the User.

MC6.1.5 The Metering Installation shall be in accordance with and conform to relevant Technical Specifications and Standards as agreed by the Single Buyer and included in the relevant Agreement. These Technical Specifications and Standards shall include:

(i) relevant Malaysian National Standards (MS);
(ii) relevant International, European technical standards, such as IEC, ISO and EN; and
(iii) other relevant national standards such as BS, DIN and ASA.

MC6.2 Data Collection System

MC6.2.1 The User or the Single Buyer as the case may be shall ensure that for each Metering Installation, the communication link and the associated equipment procured is approved under the relevant telecommunication laws and regulations and operated and maintained in accordance with the same laws and regulations.

MC6.2.2 The Single Buyer shall establish appropriate processes and procedures for the collection of the Metering Data and its storage in the Metering Database.

MC6.2.3 The rules and protocols in the use of Metering Installations and Data Collection Systems that form part of a Metering Installation must be of a type approved by the Single Buyer. The Single Buyer shall not unreasonably withhold such approval but may withhold approval if there is reasonable doubt in terms of adverse effects.

MC6.2.4 Data formats used in the Data Collection System shall allow access to the Metering Data at a Metering Installation and from the Metering Database with the data being sent to the Single Buyer with such format as has been approved by the Single Buyer.

MC7 Commissioning, Inspection, Calibration and Testing

MC7.1 Commissioning

MC7.1.1 Where commissioning of new Metering equipment or a Modification to existing Metering equipment is required the User shall notify the Single Buyer or the Single Buyer shall notify the User, as the case may be, and any Associated Users of the details of the new Metering Installation and Modifications to the existing Metering Installation at least one (1) calendar month prior to the commissioning date. The User also shall, prior to the commissioning, undertake inspection, calibration and component testing in accordance with this MC7 to ensure compliance of the Metering Installation with the provisions of the Metering Code and the requirements and procedures detailed in Appendix 2 of this Metering Code.

MC7.2 Responsibility for Inspection, Calibration and Testing

MC7.2.1 Inspection, calibration and testing of each Metering Installation shall be carried out in accordance with the inspection and testing requirements detailed in Appendix 2.

MC7.2.2 A User shall make a reasonable request for testing of any Metering Installation and the Single Buyer shall not refuse any reasonable request.

MC7.2.3 The Single Buyer must verify the results of all tests carried out in accordance with Appendix 2 recorded in the Metering Register in respect of each Metering Installation and shall arrange for sufficient audit testing of Metering Installation as the Single Buyer considers necessary for assessing whether the accuracy of each Metering installation complies with the requirements of this Metering Code.

MC7.2.4 Each User shall provide the auditor of the Single Buyer with unrestricted access to each Metering Installation for which it is responsible for the purpose of the routine testing of such Metering Installation. The Single Buyer shall give notice in advance in accordance with the relevant Agreement for such testing and the notice shall specify:

(a) the name of the person who will be carrying out the testing on behalf of the Single Buyer; and

(b) the date of the test and the time at which the test is expected to commence and conclude.

MC7.2.5 The auditor of the Single Buyer shall respect all of the User's safety and security requirements when conducting the audit tests on the Metering Installation.

MC7.2.6 The Single Buyer shall make the test results associated with a Metering Installation available to any person as soon as practicable if that person is considered by the Single Buyer to have sufficient interest in the results.

MC7.3 Procedures in the Event of Non-compliance

MC7.3.1 In the event the accuracy of the Metering Installation does not comply with the requirements of this Metering Code, the User shall:

(a) advise the Single Buyer within one (1) Business Day of the detection of such discrepancy and of the length of such discrepancy may have existed; and

(b) arrange for the accuracy of Metering Installation to be restored within a time agreed with the Single Buyer.

MC7.3.2 The Single Buyer shall make appropriate corrections to the Metering Data to take into account the errors referred to in MC7.3.1 and to minimise adjustment to the final Billing account.

MC7.4 Audit of Metering Data

MC7.4.1 A User may request the Single Buyer to conduct an audit to determine the consistency between the Metering Data held in the Metering Database and the Metering Data held in the User's Metering Installation.

MC7.4.2 If there are discrepancies between the Metering Data held in the Metering Database and the Metering Data held in the User's Metering Installation the affected Users (or Associated Users) shall together determine the most appropriate way of resolving the discrepancy.

MC7.4.3 If there are discrepancies between the Metering Data held in the Metering Database and the Metering Data held in the User's Metering Installation the Metering Data in the Metering Installation shall be taken as prima facie evidence of the Metering Point energy data.

MC7.4.4 The Single Buyer may carry out periodic, random or unannounced audits of Metering Installations to confirm compliance with this Metering Code. The Single Buyer shall be given unrestricted access to Metering Installations by all Users for the purpose of carrying such audits. The Single Buyer shall ensure that the person(s) carrying out such audits respect the User's security and safety requirements.

MC8 Security of Metering Installation and Data

MC8.1 Security of Metering Equipment

MC8.1.1 The Single Buyer shall ensure that the Metering Installation and associated communication links, interface circuits, information storage and processing systems are adequately secured by means of seals or other security devices. The seals or other security devices shall only be broken in the presence of representatives from the Single Buyer and representatives of the associated Users as the case may be.

MC8.1.2 The Single Buyer may audit the security measures applied to Metering Installations from time to time as it considers appropriate.

MC8.1.3 The Single Buyer may override any of the security measures applied or devices fitted to a Metering Installation with prior notice to the Responsible Person.

MC8.2 Security Control

MC8.2.1 The Single Buyer shall ensure that the Metering Data held in the Metering Installation is protected from unauthorized direct local and remote electronic access by implementing suitable password and/or security measures.

MC8.2.2 The Single Buyer shall hold a copy of the passwords referred to in MC8.2.1 in a secure and confidential manner.

MC8.3 Changes to Metering Equipment, Parameters and Settings

MC8.3.1 Changes to Metering equipment or to parameters or settings within a Metering Installation shall be:

(a) authorised by the Single Buyer prior to the change being made;
(b) confirmed to the Single Buyer by the User within two (2) Business Days after the changes are made;
(c) recorded by the Single Buyer in the Metering Register

MC8.3.2 Each User shall ensure that the Single Buyer is provided with alternative Metering Data acceptable to the Single Buyer while changes to the Metering equipment parameters and settings are being made.

MC8.4 Changes to Metering Data

MC8.4.1 Alterations to the original raw stored Metering Data in a Meter shall not be permitted. However in the case of the on-site accuracy testing of a Metering Installation changes shall be permitted to the uploaded Metering Data by the Single Buyer following completion of the tests.

MC9 Processing of Metering Data for Billing Purposes

MC9.1 Metering Database

MC9.1.1 The Single Buyer shall create, maintain and administer a Metering Database containing the Metering information required by this Metering Code for each metering installation registered with the Single Buyer. The Single Buyer may use agency databases to form part of the Metering Database.

MC9.2 Remote Acquisition of Data

MC9.2.1 The Single Buyer shall be responsible for the remote acquisition of the Metering Data and storing of such Metering Data in the Metering Database for Billing purposes in accordance with MC10.1. If remote acquisition becomes unavailable the Single Buyer shall arrangements for an alternative means of obtaining the relevant Metering Data.

MC9.3 Periodic Energy Metering

MC9.3.1 Metering Data relating to the amount of Active Energy and where relevant to Reactive Energy passing through a Metering Installation shall be collated by Billing Periods unless otherwise agreed with a User by the Single Buyer.

MC9.4 Data Validation and Substitution

MC9.4.1 The Single Buyer shall be responsible for the validation and substitution of Metering Data and shall develop Metering Data validation and substitution processes in consultation with Users.

MC9.4.2 Wherever available Check Metering Data shall be used by the Single Buyer to validate the Metering Data provided that the Check Metering Data has been appropriately adjusted for differences in Metering Installation accuracy.

MC9.4.3 If a Check Meter is not available or the Metering Data cannot be recovered from the Metering Installation within the time required for Billing, then a substitute value is to be prepared by the Single Buyer using a method agreed between the Single Buyer and a User or as included in a relevant Agreement.

MC9.4.4 Upon detecting a loss of Metering Data or incorrect Metering Data from a Metering Installation, the Single Buyer shall notify the relevant User within twenty four (24) hours of the detection.

MC9.5 Errors Found in Meter Tests, Inspections or Audits

MC9.5.1 If errors in excess of those prescribed in Appendix 1 are demonstrated following a Metering Installation test, inspection or audit carried out in accordance with MC8, and the Single Buyer is not aware of the time in which the error arose, and except where there is contrary evidence, the error shall be deemed to have occured at a time which is the shorter of the following:

(a) the time half way between the time of the most recent test or inspection which demonstrated that the Metering Installation complied with the relevant accuracy requirement and the time when the error was detected;or

(b) the time between the current billing period and one (1) month preceeding the time when the error was detected; or

as otherwise agreed in accordance to the relevant Agreement.

MC9.5.2 If a test or audit of a Metering Installation demonstrates a measurement error of less than two (2) times the error permitted by Appendix 1, no substitution of readings shall be required unless, in the reasonable opinion of the Single Buyer, a particular party would be significantly affected if no substitution were made.

MC9.5.3 If any substitution is required under MC9.5.2, the Single Buyer must provide substitute readings to effect a correction for that error in respect of the period since the error was deemed to have occurred in accordance with MC9.5.1.

MC10 Confidentiality

MC10.1 Metering Data and the passwords are confidential data and shall be treated as confidential information in accordance with this Metering Code by all persons bound by the Grid Code.

MC11 Metering Installation Performance

MC11.1 Metering Data shall be provided from each Connection Point for each Billing Period at a level of accuracy prescribed in Appendix 1 and with Metering Installation major component availability prescribed in MC6.1.4 unless otherwise agreed between the Single Buyer and the User.

MC11.2 If a Metering Installation Outage or malfunction occurs, the User or the Single Buyer as the case may be shall ensure that repairs are made to the Metering Installation as soon as practicable after becoming aware of the outage or malfunction and in any event within two (2) Business Days, unless an exemption is agreed and obtained from the Single Buyer.

MC11.3 Each User that becomes aware of the Metering Installation Outage or malfunction must advise the Single Buyer within one (1) Business Day of becoming aware of the malfunction.

MC11.4 All Metering Installation and Data Logger clocks shall be referenced to the Malaysian Standard Time and maintain a standard of accuracy in accordance with Appendix 1 of this Metering Code.

MC11.5 The Metering Database must be set within an accuracy of ±1 second of Malaysian Standard Time.

MC12 Operational Metering

MC12.1 Operational Metering is required by the GSO for real time operation of the Grid System. Although Operational Metering does not necessarily have the same accuracy requirements as the Revenue Metering it is however critical to efficient, safe, secure and robust operation of the Grid System by the GSO. The measurements and indications from Operational Metering is the first set of system information readily available to the control staff at NLDC and often forms the primary basis of operational decisions made.

MC12.2 The Users shall install Operational Metering as indicated in this Metering Code so as to provide such operational information in relation to each Generating Unit and each Power Station and each substation and connection Point as the GSO requires in performing his duties in accordance with this Grid Code and relevant Licence.

MC12.3 The Operational Metering information required by the GSO shall not be limited to that specified in MC4.1.6 and MC4.1.7 but shall also include all the plant signals, indications, parameters and quantities that will enable the GSO to monitor the dynamic behaviour of the Generating Plant and spinning reserve. Such information shall be presented continuously to SCADA, event recorders and such other equipment as may be developed and utilised by the GSO. The GSO shall hold all such information as confidential.

MC13 Disputes

MC13.1 Disputes concerning and in relation to this Metering Code shall be dealt with in accordance with the procedures set out in the General Conditions of this Grid Code.

<End of the Metering Code – Main Text>

Metering Code Appendix 1 – Type and Accuracy of Revenue Metering Installations

MCA.1.1 General Requirements

MCA.1.1.1 The following are the minimum requirements for Metering Installations. Users may install Metering Installations of a higher level of accuracy than that required. The full costs of such Metering Installations shall be borne by the User.

MCA.1.2 Metering Installations Commissioned Prior to The Grid Code Effective Date

MCA.1.2.1 The use of Metering class current transformers and voltage transformers that are not in accordance with Table 1 of MCA.1.3 are permitted provided that where necessary to achieve the overall accuracy requirements:

(a) of a Metering Installation of a higher accuracy class; and

(b) compensation factors are applied within the Meter to compensate for current and voltage transformer errors.

MCA.1.2.2 Protection current transformers are acceptable as an interim measure where there are no suitable Metering class current transformers are available provided the current consumption does not exceed 80% of the primary ratio and the overall accuracy and performance levels can be met.

MCA.1.2.3 Where the requirements of MCA.1.2.1 and MCA.1.2.2 cannot be achieved then the User is required to comply with the transition arrangements agreed with the Single Buyer or obtain an exemption from the Single Buyer or upgrade the Metering Installation to comply with this Appendix 1.

MCA.1.2.4 Where Metering is installed at some point other than the defined Connection Point then the User shall provide the appropriate adjustment data to the Single Buyer for approval.

MCA.1.2.5 New Metering Installations after the Grid Code Effective Date shall comply with this Metering Code.

MCA.1.3 Accuracy Requirements for Metering Installations

MCA.1.3.1 The following are the overall accuracy requirements of Metering Installation equipment and the accuracy requirements for Type 1 and Type 2 Metering Installations based upon the annual energy throughput. Tables 1, 2 and 3 summarise the accuracy requirements where:

(a) the method of calculating the overall error of the Metering Installation is by the vector sum of the errors of three major component parts constituting the Metering Installation that is the voltage transformer, the current transformer and the Meter; and

(b) where compensation is applied then the resultant Metering Installation error should be as close to zero as practicable.

Table 1: Overall Accuracy Requirements of Metering Installation Equipment

Type	Maximum Demand or Energy (GWh pa) per Metering Point	Maximum Allowable Overall Error (±%) (Refer to Tables 2&3) at Full Load		Minimum Acceptable Class of Components	Meter Clock Error (Seconds) with Reference to Malaysian Standard Time
		Active	Reactive		
1	More than 7.5MW or 60GWh per annum	0.6	1.0	0.2 CT Burden 30VA if ../1A, 15 VA if ../5A, 0.2 VT Min Burden 100 VA 0.2 Wh Meter 0.5 VARh meter	±5ppm
2	Less than 7.5MW or 60GWh per annum	1.0	2.0	0.2 CT Burden 15VA 0.5 VT Min Burden 75 VA 0.5 Wh Meter 1.0 VARh meter	±5ppm

Table 2: Accuracy Requirements of Type 1 Metering Installation – Annual Energy Throughput Greater Than 60GWh

% Rated Load	**Power Factor**					
	Unity	**0.866 Lag**		**0.5 Lag**		**Zero**
	Active	**Active**	**Reactive**	**Active**	**Reactive**	**Active**
10	0.7%	0.7%	1.4%	N/A	N/A	1.4%
50	0.6%	0.6%	1.0%	0.5%	1.0%	1.0%
100	0.6%	0.6%	1.0%	N/A	N/A	1.0%

Table 2: Accuracy Requirements of Type 2 Metering Installation – Annual Energy Throughput Less Than 60GWh

% Rated Load	Power Factor					
	Unity	0.866 Lag		0.5 Lag		Zero
	Active	Active	Reactive	Active	Reactive	Active
10	1.4%	1.4%	2.8%	N/A	N/A	2.8%
50	1.0%	1.0%	2.0%	1.5%	3.0%	2.0%
100	1.0%	1.0%	2.0%	N/A	N/A	2.0%

(Note: All measurements in Tables 2 and 3 are to be referred to 25degrees Celsius under Meter laboratory conditions.)

MCA.1.4 Check Metering

MCA.1.4.1 Check Metering shall be applied in accordance with the following Table:

Type	**Energy (GWh per annum) per Metering Point**	**Check Metering Requirement**
1	Larger than 60GWh	Check Metering Installation
2	Less than 60GWh	Check Metering

MCA.1.4.2 A Check Metering Installation shall include the provision of a separate Metering Installation using separate current transformer cores and separate secondary windings. The accuracy of Check Metering Installation shall be the same as the Main Metering Installation.

MCA.1.4.3 Wherever the Check Metering Installation accuracy level duplicates the Main Metering Installation accuracy level, the validated data set of the Main Metering Installation shall be used to determine the Energy Measurement. Where the Main Metering Installation data set cannot be validated due to errors in excess of those prescribed in this Appendix the provisions of MC9.5 shall apply.

MCA.1.4.4 The physical arrangement of Check Metering shall be agreed between the Single Buyer and the User and recorded in the Connection Agreement.

MCA.1.4.5 Check Metering Installation may be supplied from secondary circuits used for other purposes and may have a lower level of accuracy than Revenue Metering Installation as agreed between the Single Buyer and the User. The accuracy of Check Metering Installation shall not exceed twice the level prescribed in this Appendix 1 for the Revenue Metering Installation.

MCA.1.5 Resolution and Accuracy of Displayed or Captured Data

MCA.1.5.1 Any programmable settings available within a Metering Installation, Data Logger, or any peripheral device, that may affect the resolution of displayed or stored data, shall be set as agreed between the Single Buyer and the User in the relevant Agreement.

MCA.1.5.2 The resolution of the energy registration of 0.5S class Meters shall be better than 0.2 % and the resolution of the energy registration of 0.2S class Meters shall be better than 0.1 %.

MCA.1.6 General Design Requirements and Standards

MCA.1.6.1 The following requirements shall be incorporated in the design of each Metering Installation without limiting the scope of detailed design.

MCA.1.6.2 For Type 1 Metering Installations with Energy throughput greater than 60GWh per annum per Metering Point, the current transformer core and the secondary wiring associated with the Revenue Meter shall not be used for any other purpose unless otherwise agreed by the Single Buyer.

MCA.1.6.3 For Type 2 Metering Installations with Energy throughput greater than 60GWh per annum per Metering Point, the current transformer core and the secondary wiring associated with the Revenue Meter may be used for any other purposes (e.g., local Metering or protection). In such cases the User shall satisfactorily demonstrate to the Single Buyer and the GSO that the accuracy of the Metering Installation or other local Metering or protection shall not be compromised and suitable procedures and measures shall be put in place and implemented to protect the security of the Metering Installation as well as other local Metering or protection.

MCA.1.6.4 At Metering Points where a voltage transformer with separate secondary windings is not provided then the voltage supply to each Metering Installation shall be separately fused and the fuses shall be located in an accessible position as close as practicable to the voltage transformer secondary winding. For the avoidance of doubt in every new Metering Installation, the voltage transformers shall have separate secondary windings for each Metering quantity or measurement. In each Metering Installation where more than one voltage transformer is installed on the same feeder circuit, a voltage change-over arrangement shall be included to enable continue voltage supply in case of failure of a voltage transformer.

MCA.1.6.5 Secondary wiring in the Metering Installation shall be by the most direct route and the number of terminations shall be demonstrably kept to a minimum.

MCA.1.6.6 The incidence and the magnitude of burden changes on any voltage and current transformer supplying the Metering Installation shall be demonstrably kept to a minimum.

MCA.1.6.7 Wherever applicable the Meters, Data Loggers and Metering transformers in each new Metering Installation shall comply with the relevant IEC or equivalent standards. The burden of the Metering transformers shall have a burden rating with an extra 20% provision of the maximum burden calculated for the Metering Installation.

MCA.1.6.8 Suitable Isolation facilities shall be provided to facilitate testing and calibration of each Metering Installation without any adverse effects.

MCA.1.6.9 All necessary drawings and supporting information providing details of the Metering Installation shall be available for efficient maintenance and audit purposes.

<End of the Metering Code Appendix 1>

Metering Code Appendix 2 - Commissioning, Inspection, Calibration and Testing Requirements

MCA.2.1 General Requirements

MCA.2.1.1 The User shall ensure that the Metering equipment to be purchased has been type tested to the standards referenced in this Metering Code and is compliant with this Metering Code and shall furnish type test certificates to the Single Buyer in accordance with the relevant Agreement.

MCA.2.1.2 The User shall ensure that the equipment within a Metering Installation to be purchased has been tested under laboratory conditions to the required class accuracy with testing uncertainties less than the following:

Maximum allowable laboratory testing uncertainties

Class of Equipment	Uncertainty
Class 0.2 CT / VT	± 0.05%
Class 0.2 Wh Meters	± (0.05/cos θ)%
Class 0.5 CT / VT	± 0.1%
Class 0.5 Wh Meters	± (0.1/cos θ)%
Class 0.5 Varh Meters	± (0.2/sin θ)%
Class 1.0 Wh Meters	± (0.2/cos θ)%
Class 1.0 Varh Meters	± (0.3/sin θ)%
Class 2.0 Varh Meters	± (0.4/sin θ)%

Appropriate test certificates shall be kept by the owner of the equipment.

MCA.2.1.3 The Single Buyer shall ensure that commissioning and testing of the Metering installation is carried out:

(a) in accordance with this Appendix 2 of this Metering Code; or
(b) in accordance with a test plan that has been agreed and approved by the Single Buyer in consultation with the Grid Owner and GSO; and
(c) to the same requirements as for new equipment where equipment is to recycled for use in another site.

MCA.2.1.4 Associated Users may witness the tests on request to the Single Buyer and no reasonable request shall be denied.

MCA.2.1.5 The Single Buyer shall review the commissioning and testing requirements in this Appendix 2 of this Metering Code every five (5) years in accordance with equipment performance statistics and developing industry standards. Any proposed changes shall be submitted for discussion and approval at the Grid Code Committee in accordance with the procedures outlined in General Conditions (GC) of this Grid Code.

MCA.2.1.6 The Single Buyer shall provide the test results to the User in accordance with the relevant Agreement and to each Associated User upon request.

MCA.2.1.7 Unless otherwise agreed by the Single Buyer and User, the following test and inspection intervals shall be observed by the Single Buyer.

Maximum allowable laboratory and in field use testing uncertainties

		Metering Installation Type	
		Type 1	**Type 2**
In Laboratory Test	CTs /VTs	± 0.05%	± 0.1%
	Wh Meter	± (0.05/cos θ)%	± (0.1/cos θ)%
	Varh Meter	± (0.2/sin θ)%	± (0.3/sin θ)%
In Field Use	CTs /VTs	± 0.1%	± 0.2%
	Wh Meter	± (0.1/cos θ)%	± (0.2/cos θ)%
	Varh Meter	± (0.3/sin θ)%	± (0.4/sin θ)%

Maximum allowable period between tests

Metering Installation Equipment	**Metering Installation Type**	
	Type 1	**Type 2**
CT	10 years	10 years
VT	10 years	10 years
Burden Tests	Whenever Meters are tested or when Modifications are made	
CT Connected Meter (Electronic Type)	5 years	5 years

Maximum allowable period between inspections

Inspection of Metering Installation Equipment	Metering Installation Type	
	Type 1	**Type 2**
Maximum allowable period between inspections	2.5 years	2.5 years

MCA.2.2 Technical Requirements

MCA.2.2.1 In commissioning, testing and inspecting all new, modified and replacement Metering Installations the User shall ensure that the following are confirmed, recorded and notified to the Single Buyer in accordance with the relevant Agreement:

(a) current and voltage transformers are tested by primary injection and CT ratio and polarity for selected tap and VT ratio and phasing for each winding;
(b) details of installed current and voltage transformers including serial numbers, ratings and accuracy classes;
(c) burdens of current and voltage transformers for verification;
(d) Metering Installation details for the Metering Register;
(e) correct operation of Meter test terminal blocks;
(f) correct cabling and wiring;
(g) correct Meter operation for each phase current operation;
(h) Meter to RTU connections and channel allocations and local and remote interrogation facilities;
(i) labelling, start readings, synchronisation of timing, Metering equipment alarms and all other relevant information as requested by the Single Buyer, Grid Owner or GSO: and
(j) Meter accuracy field tests as applicable.

MCA.2.2.2 A typical Meter inspection shall include the following but not limited to the following:

(a) checking the Meter seals;
(b) comparison of pulse counts;
(c) comparison of the direct Meter readings;
(d) verification of Meter accuracy, parameters and physical connections; and
(e) current and voltage transformer ratios by comparison.

MCA.2.2.3 The labelling of the Metering Installation shall be in accordance with the following convention establishing the relationships

between Import and Export of Active Energy and Reactive Energy by means of a power factor:

Convention for Import and Export of Active Energy and Reactive Energy

Active Energy Flow	Power Factor	Reactive Energy Flow
Import	Lagging	Import
Import	Leading	Export
Import	Unity	Zero
Export	Lagging	Export
Export	Leading	Import
Export	Unity	Zero

For the avoidance of doubt, Export in relation to the Transmission System is the flow of Active Energy as viewed by a Generator is away from the Generator.

MCA.2.2.4 For the terms (sinθ) and (cosθ) specified in MC.A.2.1.2 and MC.A.2.1.7 reference shall be made to the ISO Document "Guide to the Expression of Uncertainty for Measurement".

<End of Appendix 2 of the Metering Code>

Metering Code Appendix 3 – Metering Register

MCA.3.1 General

MCA.3.1.1 The Metering Register forms part of the Metering Database and holds static Metering information not subject to frequent change associated with the Metering Installations as defined in this Metering Code that determine the validity and accuracy of the Metering Data.

MCA.3.1.2 The purpose of the Metering Register is to facilitate:

(a) the registration of each Metering Installation at the Connection Points;

(b) verification of the compliance of each Metering installation with the Metering Code; and

(c) auditable control of changes and Modifications to Metering Installations.

MCA.3.1.3 The data held in the Metering Register is confidential at all times and disclosure shall be treated accordingly.

MCA.3.2 Metering Register Information

MCA.3.2.1 Metering information held in the Metering Register shall include, but is not limited to the following as agreed between the Single Buyer and the User in the Connection Agreement.

MCA.3.2.2 Connection Point and Metering Point reference details, including:

(i) agreed locations and reference details;

(ii) loss compensation calculation details;

(iii) site identification details and User details; and

MCA.3.2.3 Characteristic details of the Metering equipment within the Metering Installation:

(i) Metering Installation name, recorder ID and location identifier;

(ii) serial numbers and technical details of all CTs, VTs, Meters, Data Loggers, recorders, file formats and modem details;

(iii) test results for the CTs, VTs, Meters including the compensation factors applied, calibration tables; and
(iv) reference laboratory test certificates for all relevant Metering Installation equipment.

MCA.3.2.4 Data validation and substitution processes agreed between the Single Buyer and User or between Associated Users, including:
(i) algorithms and data comparison process;
(ii) alarm processing;
(iii) Check Metering compensation; and
(iv) alternate data sources.

MCA.3.2.5 Data processing details prior to Settlement including algorithms for, half hourly generation "sent out" and User half hourly load calculations.

MCA.3.2.6 Data communication and local and remote access details, including:
(i) telephone number for data access;
(ii) technical details of communication equipment including the type and serial numbers;
(iii) communicational protocol details;
(iv) data conversion details;
(v) user identifications and access details; and
(vi) passwords.

MCA.3.2.7 The Single Buyer shall prepare appropriate formats for collection of data for the Metering Register.

MCA.3.3 Metering Point Documentation Requirements

MCA.3.3.1 There shall be appropriate documentation prepared in a format in accordance with the requirements of the Single Buyer for each Metering Point showing the electrical and physical location details of the Metering Installation and its components for the purpose of ensuring safety in testing and inspections and providing the appropriate details to staff attending the site. This document shall be kept by the User and the Single Buyer.

MCA.3.3.2 The documentation shall include, but not limited to the following:

(i) a Meter map containing any summation arrangements and channel identifications including the sign of the summations applicable;

(ii) a unique identifier for the Metering Database and cross references to the Metering Installation;

(iii) list of measured quantities;

(iv) details and designation of the Metering Point;

(v) site specific adjustments, calibration and error correction factors including relevant power flow calculations for validation; and

(vi) redundancy and back-up for Metering data with list of contacts for provision of back-up data and resolution of gaps in data.

<End of Appendix 3 of the Metering Code>